ELAINE TOWNSEND TRAIL
PHASE 2

TOWN OF INLET HIGHWAY DEPARTMENT

AUGUST 2016

C&S COMPANIES®
C&S Engineers, Inc.
499 Col. Eileen Collins Blvd.
Syracuse, New York 13212
Phone: 315-455-2000
Fax: 315-455-9667
www.cscos.com

C&S PROJECT NUMBER: J76.001.002

DESIGN SUPERVISOR	JFM	JOB MANAGER	JRF	DESIGN	JFM	CHECK	JRF
DRAFTING	PTT / MAR	CHECK	JFM	PROJECT MANAGER	JRF		

FILE NAME :
DATE/TIME : 7/26/2016
USER : mic ael'o

ALIGNMENT

AH = AHEAD
AZ = AZIMUTH
BK = BACK
℄ = BASELINE
BRG = BEARING
℄ = CENTERLINE
CS = CURVE TO SPIRAL
e = CROSS SLOPE
EQ = EQUALITY
EXT = EXTERNAL
HCL = HORIZONTAL CONTROL LINE
HSD = HEADLIGHT SIGHT DISTANCE
L = LENGTH OF CIRCULAR CURVE
LS = LENGTH OF SPIRAL
LVC = LENGTH OF VERTICAL CURVE
MC = CENTER CORRECTION OF VERTICAL CURVE
f = MAIN LINE
PC = POINT OF CURVATURE
PI = POINT OF INTERSECTION
POL = POINT ON LINE
PSD = PASSING SIGHT DISTANCE
PT = POINT OF TANGENT
PVC = POINT OF VERTICAL CURVE
PVI = POINT OF VERTICAL INTERSECTION
PVT = POINT OF VERTICAL TANGENT
R = RADIUS
SC = SPIRAL TO CURVE
SSD = STOPPING SIGHT DISTANCE
ST = SPIRAL TO TANGENT
STA = STATION
T = TANGENT LENGTH
L TGL = THEORETICAL GRADE LINE
TS = TANGENT TO SPIRAL
VC = VERTICAL CURVE

TOPOGRAPHY (DRAINAGE)

BB = BOTTOM OF BANK (STREAM)
BC = BOTTOM OF CURB
B O = BOTTOM OF OPENING
CAP = CORRUGATED ALIMINUM PIPE
CB = CATCH BASIN
CIP = CAST IRON PIPE
C STRM = CENTERLINE OF STREAM
CMP = CORRUGATED METAL PIPE
CP = CONCRETE PIPE
CSP = CORRUGATED STEEL PIPE
CULV = CULVERT
DIA = DIAMETER
DMH = DRAINAGE MANHOLE
DS = DRAINAGE STRUCTURE
D'XING = DITCH CROSSING
EHW = EXTREME HIGH WATER
EL = ELEVATION
ELEV = ELEVATION
ELW = EXTREME LOW WATER
ES = END SECTION
HW = HEADWALL
INV = INVERT
MH = MANHOLE
MHW = MEAN HIGH WATER
OHW = ORDINARY HIGH WATER
OLW = ORDINARY LOW WATER
SICPP = SMOOTH INTERIOR CORRUGATED PE PIPE
RCP = REINFORCED CONCRETE PIPE
TB = TOP OF BANK (STREAM)
TC = TOP OF CURB
TG = TOP OF GRATE
VCP = VITRIFIED CLAY PIPE

TOPOGRAPHY (MISCELLANEOUS)

ABUT = ABUTMENT
AHB = APPROXIMATE HIGHWAY BOUNDARY
AOBE = AS ORDERED BY ENGINEER
ASPH = ASPHALT
BDY = BOUNDARY
BLDG = BUILDING
BM = BENCH MARK
CC = CENTER TO CENTER
CONC = CONCRETE
CONST = CONSTRUCTION
CR = COUNTY ROAD
D = DEED DISTANCE
DM = DIRECT MEASUREMENT
DWY = DRIVEWAY
EP = EDGE OF PAVEMENT
ES = EDGE OF SHOULDER
FP = FENCE POST
FD = FOUNDATION
FL = FENCE LINE
GAR = GARAGE
GR = GRAVEL
HO = HOUSE
HWY = HIGHWAY
IP = IRON PIN OR IRON PIPE
MB = MAILBOX
MON = MONUMENT
N&W = NAIL AND WASHER
OG = ORIGINAL GROUND
O/H = OVERHEAD
P = PARCEL
PAV'T = PAVEMENT
PE = PERMANENT EASEMENT
PED POLE = PEDESTRIAN POLE
P = PROPERTY LINE
POR = PORCH
RR = RAILROAD
RTE = ROUTE
ROW = RIGHT OF WAY
ROW W/A = RIGHT OF WAY WITH ACCESS
ROW WO/A = RIGHT OF WAY WITHOUT ACCESS
RW = RETAINING WALL
SH = STATE HIGHWAY
SHLDR = SHOULDER
SPK = SPIKE
ST = STREET
STK = STAKE
STY = STORY
SW = SIDEWALK
TE = TEMPORARY EASEMENT
TO = TEMPORARY OCCUPANCY
U/G = UNDERGROUND
WW = WING WALL

UTILITIES

E = ELECTRIC
EMH = ELECTRIC MANHOLE
G = GAS
GP = GUY POLE
GSB = GAS SERVICE BOX (HOUSE LINE)
GV = GAS VALVE (MAIN LINE)
HYD = HYDRANT
LP = LIGHT POLE
LPG = LOW PRESSURE GAS
OCT = OVERHEAD CABLE TELEVISION
OHE = OVERHEAD ELECTRIC
OHW = OVERHEAD WIRE
PP = POWER POLE
SA = SANITARY SEWER
SMH = SANITARY MANHOLE
ST = STORM SEWER
T = TELEPHONE
TCB = TRAFFIC CONTROL BOX
TELBOX = TELEPHONE BOX
TEL P = TELEPHONE POLE
TMH = TELEPHONE MANHOLE
CTV = CABLE TELEVISION
W = WATER
WSB = WATER SERVICE BOX (HOUSE LINE)
WV = WATER VALVE (MAIN LINE)

SUBSURFACE EXPLORATION

STANDARD SYMBOL	⊗ ABC-1

REPLACE ABBREVIATION "AB" WITH:
AH = HAND AUGER
CP = CONE PENETROMETER
DA = 60 mm CASED DRILL HOLE
DM = DRILLING MUD
DN = 100 mm CASED DRILL HOLE
FH = HOLLOW FLIGHT AUGER
PA = POWER AUGER
PH = PROBE
PT = PERCOLATION TEST HOLE
RP = 25 mm SAMPLER (RETRACTABLE PLUG)
SP = SEISMIC POINT
TP = TEST PIT

REPLACE ABBREVIATION "C" IN CATEGORIES:
DA, DM, DN AND FH WITH:
B = BRIDGE
C = CUT
D = DAM
F = FILL
K = CULVERT
W = WALL
X = TO BE USED IF ONE OF THE ABOVE CANNOT BE DEFINED AT THE TIME THE EXPLORATION IS MADE

INDEX

SHEET NO.	DRAWING NO.	DESCRIPTION
1	COVER	COVER
2	IND-01	LIST OF ABBREVIATIONS AND INDEX
3 - 4	LEG-01 TO LEG-02	LEGEND
5	TYP-01	TYPICAL SECTIONS
6-15	PLN-01 TO PLN-10	PLAN SHEETS

NYSDOT STANDARD SHEETS

203-05	619-01	645-01
209-01	619-11	645-03
603-02	619-20	685-01
604-02	619-60	

THE TRAIL ALIGNMENT HAS BEEN SHOWN USING TANGENT SEGMENTS AND INTERSECTION ANGLE POINTS, AS SHOWN BY PI'S (POINT OF INTERSECTIONS). ALL POINTS OF INTERSECTIONS ARE REFERENCED TO NYS PLANE COORDINATES TO FACILITATE STAKEOUT OF THE TRAIL. AT THESE INTERSECTION POINTS, IT IS INTENDED THAT SMALL HORIZONTAL CURVES WILL BE CONSTRUCTED TO REMOVE SHARP ANGLES IN THE FINAL TRAIL. THE TRAIL IS PLANNED TO BE CONSTRUCTED BY THE TOWN OF INLET. THE TOWN WILL DETERMINE WHERE THE CURVES WILL BE CONSTRUCTED.

C&S COMPANIES
C&S Engineers, Inc.
499 Col. Eileen Collins Blvd.
Syracuse, New York 13212
Phone: 315-455-2000
Fax: 315-455-9667
www.cscos.com

STATE OF NEW YORK · JOHN R. FREEMAN · No. 082398 · LICENSED PROFESSIONAL ENGINEER

ELAINE TOWNSEND TRAIL - PHASE 2
TOWN OF INLET
HIGHWAY DEPARTMENT

MARK	DATE	DESCRIPTION

REVISIONS

PROJECT NO:	J76.001.002
DATE:	JULY 2016
DRAWN BY:	MAR
DESIGNED BY:	JFM
CHECKED BY:	JRF

NO ALTERATION PERMITTED HEREON EXCEPT AS PROVIDED UNDER SECTION 7209 SUBDIVISION 2 OF THE NEW YORK EDUCATION LAW

LIST OF ABBREVIATIONS AND INDEX

IND-01

Jul 26, 2016 - 4:00pm
F:\Project\J76 - Town of Inlet\J76001001 - Townsend Trail\CAD\Project Files (Current)\Phase 2\ABREV.dwg

Copyright ©

ALIGNMENT

STYLE	NAME	DESCRIPTION
	AC	CONTROL (CENTERLINE)
	AD_P	DETOUR
	AT_P	TRANSITION CONTROL
BRIDGE		
	BR	RAIL
	BSHT	SHEET PILING
CONTROL		
	CB	BASELINE
	CBPR	BASELINE, PROJECTION
DRAINAGE		
ST	DCP	CULVERT PIPE
ST	DCP_P	CULVERT PIPE (DIR)
	DDG_P	DITCH, GRASS LINED
	DDP_P	DITCH, PAVED INVERT
	DDS_P	DITCH, STONE LINED
	DFL_P	FLOW LINE
	DSSD	SLOTTED DRAIN
ENVIRONMENTAL		
S	EBLHS	BALE, STRAW
	ECT	CURTAIN, TURBIDITY
	EDMC	DAM, COFFER TYPE
	EDMEC_P	DAM, EARTHEN, CHECK
	EDMPC_P	DAM, PREFAB, CHECK
	EDMSC_P	DAM, STONE, CHECK
	EFNS	FENCE, SILT
	EFNSV	FENCE, SILT & VEGETATION
	EFNV	FENCE, VEGETATION
AA	EWAA_P	WETLAND, ADJACENT AREA
FW	EWF	WETLAND, FEDERAL
FW SW	EWFS	WETLAND, FEDERAL AND STATE
SW	EWM	WETLAND, MITIGATION AREA
SW	EWS	WETLAND, STATE

LANDSCAPE

STYLE	NAME	DESCRIPTION
	LABL	AREA, BRUSH LINE
	LAHR	AREA, HEDGE ROW
	LAPB	AREA, PLANTING BED
	LAWA	AREA, WOODED AREA OUTLINE
	LAWE	AREA, WATERS EDGE
	LCUT_P	CUT LIMIT
	LFILL_P	FILL LIMIT
	LFNC	FENCE
	LTRC	TREE ROW, CONIFEROUS
	LTRD	TREE ROW, DECIDUOUS
	LWH	WALL, H PILE
	LWR	WALL, RETAINING
	LWS	WALL, STONE

ROW MAPPING

STYLE	NAME	DESCRIPTION
	MDL	DEED LINE
PE	MEE	EASEMENT, EXISTING
PE	MEP_P	EASEMENT, PERMANENT
APE	MEPA_P	EASEMENT, PERMANENT, APPROX.
TE	MET_P	EASEMENT, TEMPORARY
ATE	META_P	EASEMENT, TEMPORARY, APPROX.
FEE	MF_P	FEE ACQUISITION, W/ ACCESS
AFEE	MFA_P	FEE ACQUISITION, APPROXIMATE
	MFS_P	FEE ACQUISITION, SHAPE
FEE W/OA	MFWOA_P	FEE ACQUISITION, W/O ACCESS
	MHA	HISTORICAL, ACQUISITION
HB	MHB	HIGHWAY BOUNDARY
AHB	MHBA	HIGHWAY BOUNDARY, APPROX.
	MHBW	HWY BOUNDARY, FACE OF WALL
HB W/OA	MHBWOA	HIGHWAY BOUNDARY, W/O ACCESS
	MJC	JURISDICTION, CITY
	MJCY	JURISDICTION, COUNTY
	MJHD	JURISDICTION, HISTORIC DISTRICT
	MJLL	JURIS., (GREAT, MILITARY) LOT LINE
	MJN	JURISDICTION, NATION
	MJPB	JURISDICTION, PUBLIC LANDS
	MJS	JURISDICTION, STATE
	MJT	JURISDICTION, TOWN
	MJV	JURISDICTION, VILLAGE
	MPL	PROPERTY LOT LINE
	MPLA	PROPERTY LOT LINE, APPROXIMATE
	MSL	SUB LOT LINE

ROADWAY

STYLE	NAME	DESCRIPTION
CZ	RCZ_P	CLEAR ZONE
	RG	GUIDE RAIL, MISCELLANEOUS
	RGB	GUIDE RAIL, BOX BEAM
	RGBM	GUIDE RAIL, BOX BEAM, MEDIAN
	RGC	GUIDE RAIL, CABLE
	RGCB	GUIDE RAIL, CONCRETE BARRIER
	RGP_P	GUIDE POST
	RGW	GUIDE RAIL, W BEAM
	RGWM	GUIDE RAIL, W BEAM, MEDIAN
	RPB	PARKING BUMPER
	RRC	RAIL ROAD, CATENARY
	RRER	RAIL ROAD, 3RD RAIL
	RRPLS_P	RAIL, PHOTO, LARGE SCALE
	RRPSS	RAIL, PHOTO, SMALL SCALE
	RRS	RUMBLE STRIP
	RRSLS_P	RAIL, SURVEY, LARGE SCALE
	RRSSS	RAIL, SURVEY, SMALL SCALE

SIGNS

STYLE	NAME	DESCRIPTION
	SBLB	BILLBOARDS
	SM	MULTIPLE POST
	SSO	STRUCTURE, OVERHEAD
	SSOC	STRUCTURE, OVHD. CANTILEVER

STRIPING

STYLE	NAME	DESCRIPTION
	STB*	BROKEN LINE
	STDB*	DOUBLE BROKEN LINE
	STDL*	DOTTED LINE LONG
	STDS*	DOTTED LINE SHORT
	STFB*	FULL BARRIER LINE
	STH*	HATCH LINE
	STPB*	PARTIAL BARRIER LINE
	STRCT	ROUNDABOUT, CAT TRACKS
	STRYL	ROUNDABOUT, YIELD LINE
	STSB	STOP BAR
	STSE*	SOLID, EDGE
	STXL*	X WALK, LADDER LINE
		* = W (WHITE) OR Y (YELLOW)

TRAFFIC CONTROL

STYLE	NAME	DESCRIPTION
	TCSW	SIGNAL, SPAN WIRE

TRAFFIC WORK ZONE

STYLE	NAME	DESCRIPTION
	TWZBT_P	BARRIER, TEMPORARY
	TWZBTWL_P	BARRIER, TEMPORARY, W/ WARNING LIGHTS
	TWZCD_P	CHANNELIZING DEVICE
	TWZPMRC_P	PAVEMENT MARKING REMOVAL OR COVERING

UTILITIES

STYLE	NAME	DESCRIPTION
C	UC	CONDUIT, UNDERGROUND
]C[	UCH	CONDUIT, HANGING
OC	UCO	CONDUIT, OVERHEAD
E	UE	ELECTRIC LINE, UNDERGROUND
]E[	UEH	ELECTRIC LINE, HANGING
OE	UEO	ELECTRIC LINE, OVERHEAD
OET	UETO	ELECTRIC TRANSMISSION, OVERHEAD
	UESS	ELECTRIC, SUBSTATIONS
FO	UFO	FIBER OPTIC, UNDERGROUND
]FO[	UFOH	FIBER OPTIC, HANGING
OFO	UFOO	FIBER OPTIC, OVERHEAD
G	UG	GAS, UNDERGROUND
]G[	UGH	GAS, HANGING
OG	UGO	GAS, OVERHEAD
IC	UIC	INFORM CABLE, UNDERGROUND
]IC[	UICH	INFORM CABLE, HANGING
O	UO	OIL LINE, UNDERGROUND
]O[	UOH	OIL LINE, HANGING
	UPBP	POLE, BRACE, PUSH BRACE
	UPGW	POLE, GUY WIRE
SA	USA	SANITARY SEWER, UNDERGROUND
]SA[	USAH	SANITARY SEWER, HANGING
SAF	USAF	SANITARY SEWER, FORCE MAIN, UGND
]SAF[	USAFH	SANITARY SEWER, FORCE MAIN, HANG
T	UT	TELEPHONE, UNDERGROUND
]T[	UTH	TELEPHONE, HANGING
OT	UTO	TELEPHONE, OVERHEAD
CTV	UTV	CABLE TV, UNDERGROUND
]CTV[	UTVH	CABLE TV, HANGING
OCTV	UTVO	CABLE TV, OVERHEAD
UU	UUU	UNKNOWN, UNDERGROUND
]UU[	UUH	UNKNOWN, HANGING
OUU	UUO	UNKNOWN, OVERHEAD
W	UW	WATER LINE, UNDERGROUND
]W[	UWH	WATER LINE, HANGING
OW	UWO	WATER LINE, OVERHEAD

1. THE LEGEND ILLUSTRATES MAPPING FEATURES (EXISTING AND PROPOSED).
2. FEATURES ARE SHOWN AS EITHER LINEAR (ROADWAY GUIDERAIL, ROADWAY SIDEWALK, UTILITY LINES, ETC.) OR POINT (SIGN, UTILITY POLE, ETC.).
3. FEATURES SHOWN ON THE LEGEND AS EXISTING FEATURES ALSO HAVE CORRESPONDING PROPOSED FEATURES.
4. PROPOSED FEATURE SYMBOLOGY IS IDENTICAL TO EXISTING FEATURE SYMBOLOGY EXCLUDING LINE WEIGHT. LINE WEIGHT FOR PROPOSED FEATURES IS THICKER (0.015 in ON B SIZE DRAWINGS).
5. MAPPING FEATURES NOT INCLUDED ON THE LEGEND SHEET DO NOT HAVE A UNIQUE SYMBOLOGY (SUCH AS THE PAVEMENT EDGE, PAVEMENT EDGE OF TRAVEL WAY) AND SHOULD BE LABELED ON THE PLANS.
6. FEATURES SHOWN AT THE HEAVIER WEIGHT ARE PROPOSED ONLY AND DO NOT HAVE CORRESPONDING EXISTING FEATURES.

THE TRAIL ALIGNMENT HAS BEEN SHOWN USING TANGENT SEGMENTS AND INTERSECTION ANGLE POINTS, AS SHOWN BY PI'S (POINT OF INTERSECTIONS). ALL POINTS OF INTERSECTIONS ARE REFERENCED TO NYS PLANE COORDINATES TO FACILITATE STAKEOUT OF THE TRAIL. AT THESE INTERSECTION POINTS, IT IS INTENDED THAT SMALL HORIZONTAL CURVES WILL BE CONSTRUCTED TO REMOVE SHARP ANGLES IN THE FINAL TRAIL. THE TRAIL IS PLANNED TO BE CONSTRUCTED BY THE TOWN OF INLET. THE TOWN WILL DETERMINE WHERE THE CURVES WILL BE CONSTRUCTED.

C&S COMPANIES

C&S Engineers, Inc.
499 Col. Eileen Collins Blvd.
Syracuse, New York 13212
Phone: 315-455-2000
Fax: 315-455-9667
www.cscos.com

STATE OF NEW YORK · JOHN R. FREEMAN · No. 082398 · LICENSED PROFESSIONAL ENGINEER

ELAINE TOWNSEND TRAIL - PHASE 2
TOWN OF INLET
HIGHWAY DEPARTMENT

MARK	DATE	DESCRIPTION

REVISIONS

PROJECT NO:	J76.001.002
DATE:	JULY 2016
DRAWN BY:	MAR
DESIGNED BY:	JFM
CHECKED BY:	JRF

NO ALTERATION PERMITTED HEREON EXCEPT AS PROVIDED UNDER SECTION 7209 SUBDIVISION 2 OF THE NEW YORK EDUCATION LAW

LEGEND

LEG-01

Jul 26, 2016 - 4:01pm
F:\Project\J76 - Town of Inlet\J76001001 - Townsend Trail\CADD\Project Files (Current)\Phase 2\leg1.dwg

Copyright ©

ALIGNMENT

CELL	NAME	DESCRIPTION
	ACC	CENTER OF CURVATURE
	ACOGO	COGO
	ACS	CURVE TO SPIRAL
	ADPI_P	DETOUR, POINT OF INTERSECT.
	ADPL_P	DETOUR, POINT ON LINE
	AEQN	EQUATION
	AEQNAHD	EQUATION AHEAD
	AEQNBK	EQUATION BACK
	AEVT	EVENT STATION
	APC	POINT OF CURVATURE
	APCC	POINT OF COMPOUND CURVATURE
	API	POINT OF INTERSECTION
	APOB	POINT OF BEGINNING
	APOC	POINT OF CURVATURE
	APOE	POINT OF END
	APOL	POINT ON LINE
	APOS	POINT ON SPIRAL
	APOT	POINT ON TANGENT
	APOVC	POINT ON VERTICAL CURVE
	APOVT	POINT ON VERTICAL TANGENT
	APORC	POINT ON REVERSE CURVE
	APT	POINT OF TANGENCY
	APVC	POINT OF VERTICAL CURVATURE
	APVCC	POINT OF VERT. CMPND CURVE
	APVI	POINT OF VERT. INTERSECTION
	APVRC	POINT OF VERT. REVERSE CURVE
	APVT	POINT OF VERTICAL TANGENCY
	ASC	SPIRAL TO CURVE
	ASPI	SPIRAL POINT OF INTERSECTION
	ASTS	SPIRAL TO SPIRAL
	AST	SPIRAL TO TANGENT
	ATS	TANGENT TO SPIRAL
	AVEVT	VERTICAL EVENT POINT
	AVHIGH	VERTICAL HIGH POINT
	AVLOW	VERTICAL LOW POINT

BRIDGE

CELL	NAME	DESCRIPTION
	BSC	BRIDGE, SCUPPER

CONTROL

CELL	NAME	DESCRIPTION
	CBP	BASELINE, POINT
	CBPOL	BASELINE, POINT ON LINE
	CBSP	BASELINE, SPUR POINT
	CBTP	BASELINE, TIE POINT
	CPBM	BENCHMARK
	CPH	POINT, HORIZ. PHOTOGRAMMETRY
	CPSM	POINT, SURVEY MARKER, PERM.
	CPSV	POINT, VERT., PHOTOGRAMMETRY

CELL	NAME	DESCRIPTION
	DINV	INVERT
	DS	STRUCTURE, RECTANGULAR
	DSI	STRUCTURE, INVERT
	DSM	STRUCTURE, MANHOLE
DSMTXX	DSMTXX_P	STRUCTURE, MANHOLE, TYPE "XX" "XX" = 48, 60, 72, 96
	DSR	STRUCTURE, ROUND
DST"X"CB	DST"X"CB_P	STRUCTURE, RECT., WITH CURB TYPE "X" "X" = F, G, N, O, P, R
DST"X"	DST"X"_P	STRUCTURE, RECT., TYPE "X" "X" = I, K, L, M, O, P, U

ENVIRONMENTAL

CELL	NAME	DESCRIPTION
CULV	EIOP_P	STR., INLET, OUTLET PROT.
GB	EIPGB_P	STR., INLET PROT., GRAVEL BAG
H/S	EIPHS_P	STR., INLET PROT., HAY/STRAW
PRFB	EIPP_P	STR., INLET PROT., PREFAB.
SF	EIPSF_P	STR., INLET PROT., SILT FENCE
	ERCB	RISER, CONCRETE BOX
	ETRS_P	TRAP, SEDIMENT
	EWFG	WETLAND FLAG

GEOTECHNICAL

CELL	NAME	DESCRIPTION
	GDH	DRILL HOLE

LANDSCAPE

CELL	NAME	DESCRIPTION
	LELS	ELEVATION, SPOT
	LFP	FLAG POLE
	LMB	MAILBOX
	LPB	PAPER BOX
	LPST	POST, SINGLE
	LRB	ROCK, BOULDER
	LSHC	SHRUB, CONIFEROUS
	LSHD	SHRUB, DECIDUOUS
	LTC	TREE, CONIFEROUS
	LTD	TREE, DECIDUOUS
	LTS	TREE, STUMP
	LTW_P	TREE, WELL OR WALL
	LUKP	UNKNOWN POINT

ITS

CELL	NAME	DESCRIPTION
	IANT_P	ANTENNAS
A	IASCTS	ACCOU. SPEED/COUNT SNSR.S
P	ICABPAD	CABINET & PAD
	ICCTV	CCTV SITE
CDPD	ICDPD	CDPD TRANSCEIVER
	ICELLT	CELL PHONE TOWER
	ICJB	CONDUIT JACK OR BORING
	ICNTLCAB	CONTROLLER CABINET
C	ICPB	COMMUNICATION PULL BOX
	ICTD	CONDUIT TURNING DOWN
	ICTU	CONDUIT TURNING UP
C	ICVTRT	COMM. VEH. ROAD TRANSCEIVER
	IDEFAULT	DEFAULT
EZ	IEZR	E-ZPASS READER
EZ-T	IEZTR	TRANSMITTAL READER
XC	IFOXCAB	FIBER OPTIC X-CONNECT CABINET
	IFUSSPL	FUSION SPLICE
	IHARADV	HAR ADVISORY SIGN
	IHARST	HAR SITE
LC	ILC	LOAD CENTER
	IMECSPL	MECHANICAL SPLICE
PM	IMSCS	PORT. SPEED & COUNT SENSOR
M	IMSCTS	MICRO SPEED & COUNT SENSOR
M	IMT	MICROWAVE TRANSCEIVER
VMS	IOVHVMS	PERM. OVERHEAD VMS
PA	IPASCS	PORT. ACCOU. SPD & CNT. SENSOR
	IPEDS	PEDESTRIAN SIGNAL HEAD
	IPSS	PAVEMENT SURFACE SENSOR
PVMS	IPVMS	PERM. VMS
RM	IRM	RAMP METER
RWIS	IRWIS	RDWY WEATHER INFO. SENSOR
	ISP	SOLAR PANEL
SS	ISST	SPREAD SPECT. TRANSCEIVER
TC	ITDB	TELEPHONE DEMARCATION BLK
TP	ITP	SUBSURFACE TEMP. PROBE
	IVTRT	VEHICLE TO RDWY TRANSCEIVER
WIM	IWIMD	WEIGHT IN MOTION DETECTOR
WVR	IWVR	WIRELESS VIDEO REPEATER
V	IWVRC	WIRELESS VIDEO RECEIVER
V	IWVTT	WIRELESS VIDEO TRANSMITTER

ROW MAPPING

CELL	NAME	DESCRIPTION
	MDL1P	DEED LINE, TYPE 1
	MDL2P	DEED LINE, TYPE 2
	MDL3P	DEED LINE, TYPE 3
	MDL4P	DEED LINE, TYPE 4
	MDL5P	DEED LINE, TYPE 5
	MEEP	EASEMENT, EXISTING
A	MEPAP_P	EASEMENT, PERM., APPROX.
	MEPP_P	EASEMENT, PERM., BACK LINE
	MEPSP_P	EASEMENT, PERM., SHAPE
A	MFAP_P	FEE ACQUISITION, APPROX.
	MFP_P	FEE ACQUISITION, BACK LINE
	MFSP_P	FEE ACQUISITION, SHAPE
	MHBAP	HIGHWAY BNDRY., APPROX.
	MHBCP	HISTORICAL, BLDG. CORNERS
	MHBP	HIGHWAY BNDRY, PT.
	MJCP	PT., JURIS. CITY
	MPBC	PT., BUILDING CORNER
	MPCC	PT., CROSS CUT
	MPDH	PT., DRILL HOLE
	MPF	PT., FENCE LOCATION
	MPIP	PT., IRON PIPE
	MPIR	PT., IRON ROD
	MPM	PT., MONUMENT
	MPMM	PT., MONUMENT, MISC.
	MPN	PT., NAIL
	MPRS	PT., RAILROAD SPIKE
	MPSP	PT., SPIKE
	MPST	PT., STAKE
	MPTW	PT., TREE W/ WIRE
	MPWL	PT., WALL LOCATION

ROW ACQUISITION

CELL	NAME	DESCRIPTION
M1 P1 FEE	MFS_P_T	FEE ACQUISITION
M1 P1 PE	MEPS_P_T	EASEMENT, PERMANENT
M1 P1 TE	METS_P_T	EASEMENT, TEMPORARY
M1 P1 TO	METS_P_T	OCCUPANCY, TEMPORARY
M1 P1 FEE WO/A	MFS_P_T	FEE ACQUISITION W/O ACCESS

ROADWAY

CELL	NAME	DESCRIPTION
	RES_P	ELEVATION, SPOT
	RGA	GUIDE RAIL, ANCHOR
	RGP	GUIDE POST, SINGLE

SIGNS

CELL	NAME	DESCRIPTION
	S	SINGLE POST
	S_P	SINGLE POST, PROPOSED
	SB_P	BACK TO BACK, PROPOSED
	SDEL	DELINEATORS
	SPM	PARKING METER
RFM	SRM	REFERENCE MARKERS
	SRSC3	SHLD, CTY, 123 DIG.
	SRSC4	SHLD, CTY, 4 DIG.
	SRSCT2	SHLD, CTY TOUR, 1-2 DIG.
	SRSCT4	SHLD, CTY TOUR, 3-4 DIG.
	SRSI	SHLD, INTERSTATE
	SRSN2	SHLD, NATIONAL, 2 DIG.
	SRSN3	SHLD, NATIONAL, 3 DIG.
	SRSS2	SHLD, STATE, 2 DIG.
	SRSS3	SHLD, STATE, 3 DIG.
	SRSS4	SHLD, STATE, 4 DIG.

TRAFFIC CONTROL

CELL	NAME	DESCRIPTION
	TCBJ	BOX, JUNCTION
T	TCBP	BOX, PULL BOX
	TCBS	BOX, SPLICE
	TCMC	MICROCOMPUTER CABINET
	TCPP	PED POLE
	TCSH	SIGNAL HEADS
	TCSP	SIGNAL POLE

TRAFFIC WORK ZONE

CELL	NAME	DESCRIPTION
	TWZAP_P	ARROW PANEL
	TWZAPC_P	ARROW PANEL, CAUTION MODE
	TWZAPT_P	ARROW PANEL, TRAILER OR SUPPORT
	TWZBCD_P	BARRICADE (TYPE III)
	TWZCMS_P	CHANGEABLE MESSAGE SIGN (PVMS)
	TWZFLG_P	FLAGGER
	TWZFT_P	FLAG TREE
	TWZIA_P	IMPACT ATTENUATOR / CRASH CUSHION (TEMPORARY)
	TWZLUM_P	LUMINAIRE (TEMPORARY)
	TWZSDT_P	SYMBOL, DIRECTION OF TRAFFIC
	TWZSDTD_P	SYMBOL, DIRECTION OF TEMPORARY TRAFFIC DETOUR
	TWZSGN_P	SIGN (TEMPORARY)
	TWZSIG_P	SIGNAL, TRAFFIC OR PEDESTRIAN (TEMPORARY)
	TWZWL_P	WARNING LIGHT
	TWZWV_P	WORK VEHICLE
	TWZWVA_P	WORK VEHICLE WITH TRUCK MOUNTED ATTENUATOR

UTILITIES

CELL	NAME	DESCRIPTION
E	UEB	ELECTRIC, BOX
E	UEM	ELECTRIC, METER
E	UEMH	ELECTRIC, MANHOLE
	UEPT	ELECTRIC, POLE, TRANS.
G	UGM	GAS, METER
G	UGMH	GAS, MANHOLE
	UGLM	GAS, LINE MARKER
FP	UGP	GAS/FUEL PUMP
	UGV	GAS, VALVE
	UGVT	GAS, VENT
	ULP	LIGHTING, POLE
	ULPM	LIGHTING, POLE, MEDIAN
	ULPP	LIGHTING, POLE, PED.
	UMFC	MISC. FILLER CAP
	UOLM	OIL, LINE MARKER
	UP	POLE, WITH UTILITY
	UPD	POLE, DEAD (NO UTILITY)
	UPL	POLE, WITH LIGHT
S	USMH	SANITARY SEWER MANHOLE
P	UTB	TELEPHONE, BOOTH
	UTLM	TELEPHONE, LINE MARKER
T	UTMH	TELEPHONE, MANHOLE
	UTVLM	CABLE TV, LINE MARKER
C	UTVPB	CABLE TV, PULL BOX
	UUB	UNKNOWN, BOX
	UUJB	UNKNOWN, JUNCTION BOX
	UUMH	UNKNOWN, MANHOLE
	UUPB	UNKNOWN, PULL BOX
	UUVL	UNKNOWN, VALVE
	UUVT	UNKNOWN, VENT
	UUW	UNKNOWN, WELL
	UWFH	WATER, FIRE HYDRANT
W	UWM	WATER, METER
W	UWMH	WATER, MANHOLE
	UWV	WATER, VALVE
W	UWW	WATER, WELL

1. THE LEGEND ILLUSTRATES MAPPING FEATURES (EXISTING AND PROPOSED).
2. FEATURES ARE SHOWN AS EITHER LINEAR (ROADWAY GUIDERAIL, ROADWAY SIDEWALK, UTILITY LINES, ETC.) OR POINT (SIGN, UTILITY POLE, ETC.).
3. FEATURES SHOWN ON THE LEGEND AS EXISTING FEATURES ALSO HAVE CORRESPONDING PROPOSED FEATURES.
4. PROPOSED FEATURE SYMBOLOGY IS IDENTICAL TO EXISTING FEATURE SYMBOLOGY EXCLUDING LINE WEIGHT. LINE WEIGHT FOR PROPOSED FEATURES IS THICKER (0.40 mm ON B SIZE DRAWINGS).
5. MAPPING FEATURES NOT INCLUDED ON THE LEGEND SHEET DO NOT HAVE A UNIQUE SYMBOLOGY (SUCH AS THE PAVEMENT EDGE, PAVEMENT EDGE OF TRAVEL WAY) AND SHOULD BE LABELED ON THE PLANS.
6. FEATURES SHOWN AT THE HEAVIER WEIGHT ARE PROPOSED ONLY AND DO NOT HAVE CORRESPONDING EXISTING FEATURES.

THE TRAIL ALIGNMENT HAS BEEN SHOWN USING TANGENT SEGMENTS AND INTERSECTION ANGLE POINTS, AS SHOWN BY PI'S (POINT OF INTERSECTIONS). ALL POINTS OF INTERSECTIONS ARE REFERENCED TO NYS PLANE COORDINATES TO FACILITATE STAKEOUT OF THE TRAIL. AT THESE INTERSECTION POINTS, IT IS INTENDED THAT SMALL HORIZONTAL CURVES WILL BE CONSTRUCTED TO REMOVE SHARP ANGLES IN THE FINAL TRAIL. THE TRAIL IS PLANNED TO BE CONSTRUCTED BY THE TOWN OF INLET. THE TOWN WILL DETERMINE WHERE THE CURVES WILL BE CONSTRUCTED.

C&S COMPANIES
C&S Engineers, Inc.
499 Col. Eileen Collins Blvd.
Syracuse, New York 13212
Phone: 315-455-2000
Fax: 315-455-9667
www.cscos.com

STATE OF NEW YORK · JOHN R. FREEMAN · No. 082398 · LICENSED PROFESSIONAL ENGINEER

ELAINE TOWNSEND TRAIL - PHASE 2
TOWN OF INLET
HIGHWAY DEPARTMENT

MARK	DATE	DESCRIPTION

REVISIONS

PROJECT NO:	J76.001.002
DATE:	JULY 2016
DRAWN BY:	MAR
DESIGNED BY:	JFM
CHECKED BY:	JRF

NO ALTERATION PERMITTED HEREON EXCEPT AS PROVIDED UNDER SECTION 7209 SUBDIVISION 2 OF THE NEW YORK EDUCATION LAW

LEGEND

LEG-02

Jul 28, 2016 - 4:02pm
F:\Projects\J76 - Town of Inlet\J76001001 - Townsend Trail\CADD\Project Files (Current)\Phase 2\leg2.dwg

Copyright ©

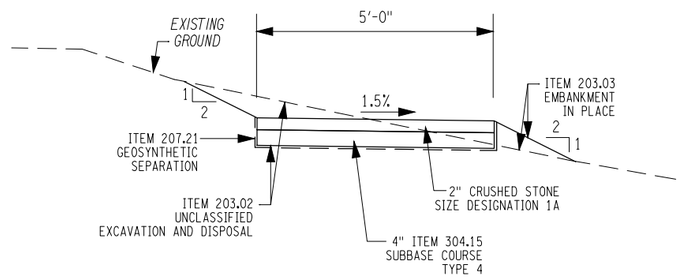

NOTE: ALL DISTURBED AREAS TO BE SEEDED, ITEM 610.0203.
TOPSOIL TO BE PLACED AS ORDERED BY ENGINEER, ITEM 613.02.

TOWNSEND TRAIL TYPICAL SECTION

NOT TO SCALE

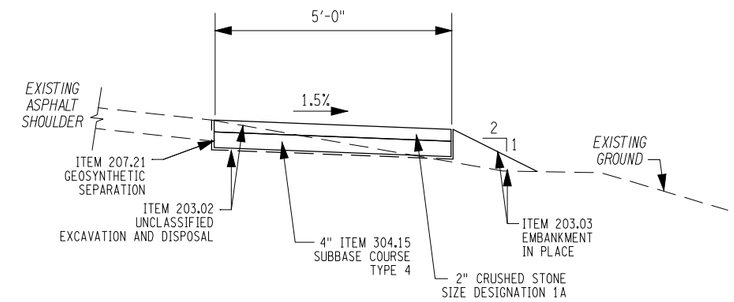

NOTE: ALL DISTURBED AREAS TO BE SEEDED, ITEM 610.0203.
TOPSOIL TO BE PLACED AS ORDERED BY ENGINEER, ITEM 613.02.

TOWNSEND TRAIL TYPICAL SECTION FROM EDGE OF EXISTING SHOULDER

NOT TO SCALE

THE TRAIL ALIGNMENT HAS BEEN SHOWN USING TANGENT SEGMENTS AND INTERSECTION ANGLE POINTS, AS SHOWN BY PI'S (POINT OF INTERSECTIONS). ALL POINTS OF INTERSECTIONS ARE REFERENCED TO NYS PLANE COORDINATES TO FACILITATE STAKEOUT OF THE TRAIL. AT THESE INTERSECTION POINTS, IT IS INTENDED THAT SMALL HORIZONTAL CURVES WILL BE CONSTRUCTED TO REMOVE SHARP ANGLES IN THE FINAL TRAIL. THE TRAIL IS PLANNED TO BE CONSTRUCTED BY THE TOWN OF INLET. THE TOWN WILL DETERMINE WHERE THE CURVES WILL BE CONSTRUCTED.

C&S COMPANIES
C&S Engineers, Inc.
499 Col. Eileen Collins Blvd.
Syracuse, New York 13212
Phone: 315-455-2000
Fax: 315-455-9667
www.cscos.com

ELAINE TOWNSEND TRAIL - PHASE 2
TOWN OF INLET
HIGHWAY DEPARTMENT

MARK	DATE	DESCRIPTION

REVISIONS

PROJECT NO:	J76.001.002
DATE:	JULY 2016
DRAWN BY:	MAR
DESIGNED BY:	JFM
CHECKED BY:	JRF

NO ALTERATION PERMITTED HEREON EXCEPT AS PROVIDED UNDER SECTION 7209 SUBDIVISION 2 OF THE NEW YORK EDUCATION LAW

CIVIL

TYPICAL SECTIONS

TYP-1

Jul 26, 2016 - 4:03pm
F:\Project\J76 - Town of Inlet\J76001001 - Townsend Trail\CADD\Project Files (Current)\Phase 2\Typical Sections.dwg

Copyright ©

INDEX

PROPOSED 5' WIDE STONE TRAIL

15" PROPOSED STORM SEWER WITH END SECTION

PROPOSED DRAINAGE INLET

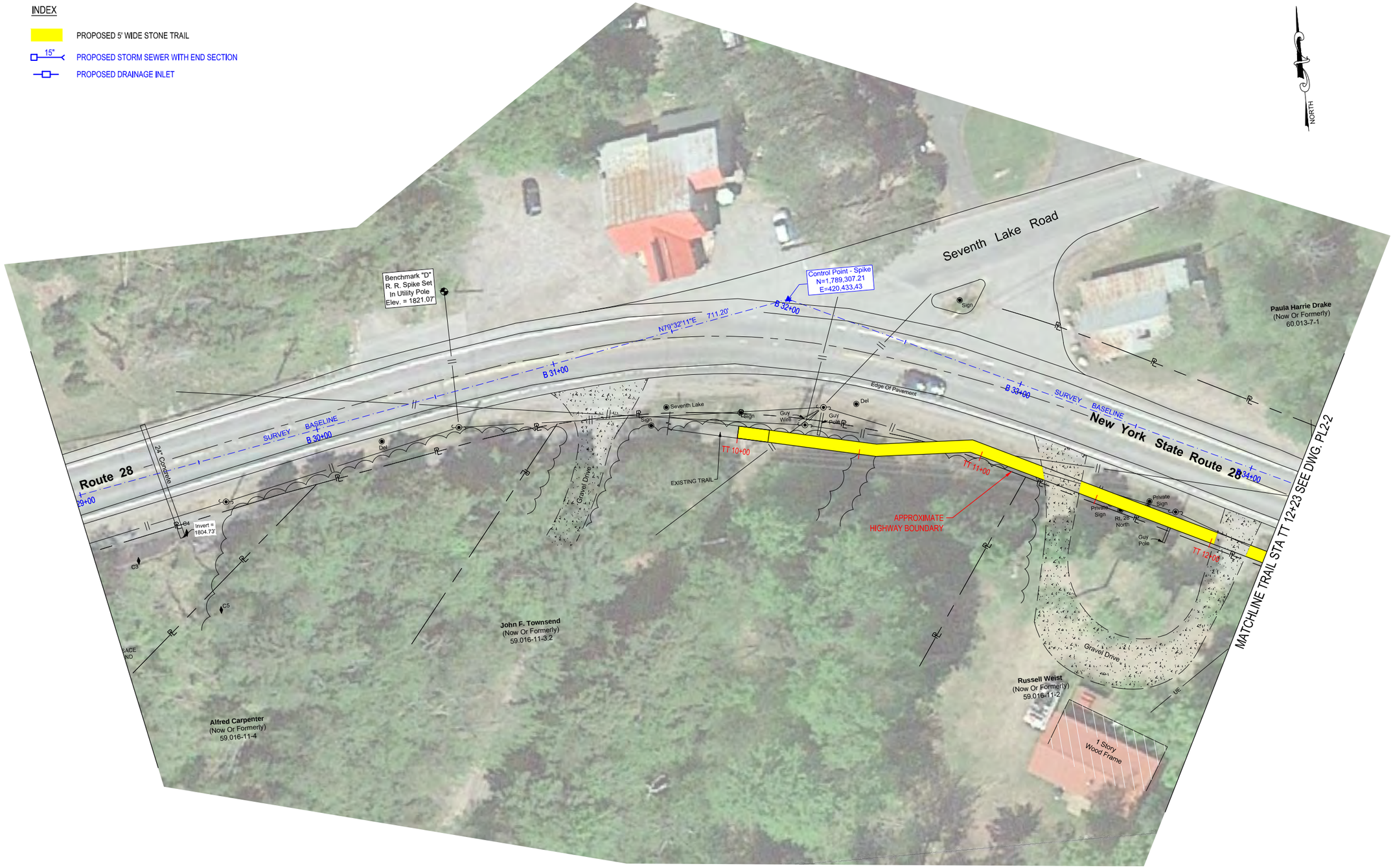

TRAFFIC CONTROL NOTE:

NO LANE CLOSURES FROM FRIDAY 12:00 PM TO MONDAY 12:00 PM.

PLAN

0 20' 40'

THE TRAIL ALIGNMENT HAS BEEN SHOWN USING TANGENT SEGMENTS AND INTERSECTION ANGLE POINTS, AS SHOWN BY PI'S (POINT OF INTERSECTIONS) . ALL POINTS OF INTERSECTIONS ARE REFERENCED TO NYS PLANE COORDINATES TO FACILITATE STAKEOUT OF THE TRAIL . AT THESE INTERSECTION POINTS, IT IS INTENDED THAT SMALL HORIZONTAL CURVES WILL BE CONSTRUCTED TO REMOVE SHARP ANGLES IN THE FINAL TRAIL . THE TRAIL IS PLANNED TO BE CONSTRUCTED BY THE TOWN OF INLET. THE TOWN WILL DETERMINE WHERE THE CURVES WILL BE CONSTRUCTED .

C&S COMPANIES

C&S Engineers, Inc.
499 Col. Eileen Collins Blvd.
Syracuse, New York 13212
Phone: 315-455-2000
Fax: 315-455-9667
www.cscos.com

STATE OF NEW YORK · JOHN R. FREEMAN · No. 082398 · LICENSED PROFESSIONAL ENGINEER

ELAINE TOWNSEND TRAIL - PHASE 2
TOWN OF INLET
HIGHWAY DEPARTMENT

MARK	DATE	DESCRIPTION

REVISIONS

PROJECT NO:	J76.001.002
DATE:	JULY 2016
DRAWN BY:	MAR
DESIGNED BY:	JFM
CHECKED BY:	JRF

NO ALTERATION PERMITTED HEREON EXCEPT AS PROVIDED UNDER SECTION 7209 SUBDIVISION 2 OF THE NEW YORK EDUCATION LAW

CIVIL

PLAN

STA TT 10+00
TO
STA TT 12+23

PL2-1

Jul 26, 2016 - 4:06pm
F:\Project\J76 - Town of Inlet\J76001001 - Townsend Trail\CADD\Project Files (Current)\Phase 2\Plan 1.dwg

Copyright ©

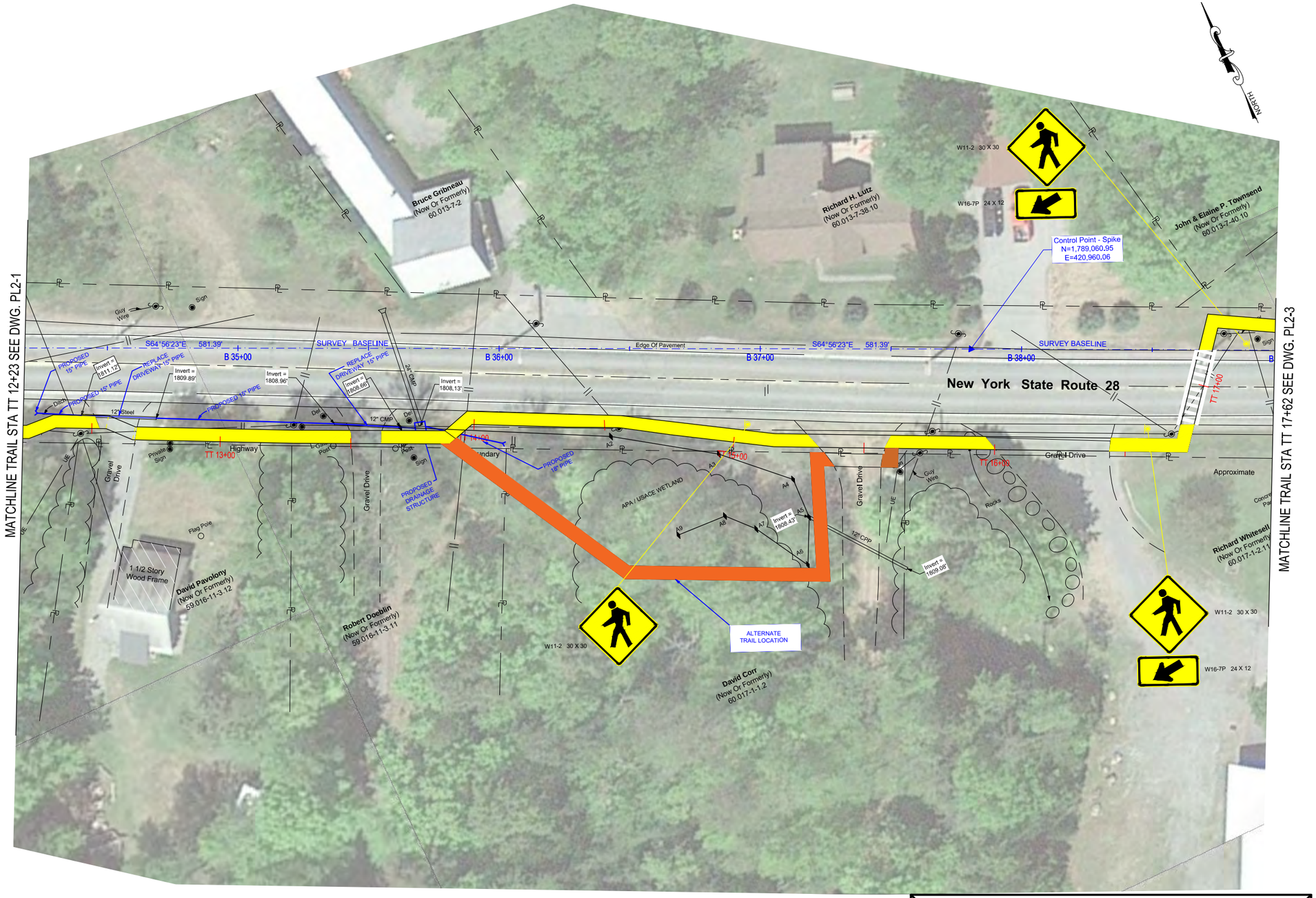

PLAN

0 20' 40'

THE TRAIL ALIGNMENT HAS BEEN SHOWN USING TANGENT SEGMENTS AND INTERSECTION ANGLE POINTS, AS SHOWN BY PI'S (POINT OF INTERSECTIONS). ALL POINTS OF INTERSECTIONS ARE REFERENCED TO NYS PLANE COORDINATES TO FACILITATE STAKEOUT OF THE TRAIL. AT THESE INTERSECTION POINTS, IT IS INTENDED THAT SMALL HORIZONTAL CURVES WILL BE CONSTRUCTED TO REMOVE SHARP ANGLES IN THE FINAL TRAIL. THE TRAIL IS PLANNED TO BE CONSTRUCTED BY THE TOWN OF INLET. THE TOWN WILL DETERMINE WHERE THE CURVES WILL BE CONSTRUCTED.

C&S COMPANIES
C&S Engineers, Inc.
499 Col. Eileen Collins Blvd.
Syracuse, New York 13212
Phone: 315-455-2000
Fax: 315-455-9667
www.cscos.com

STATE OF NEW YORK · JOHN R. FREEMAN · No. 082398 · LICENSED PROFESSIONAL ENGINEER

ELAINE TOWNSEND TRAIL - PHASE 2
TOWN OF INLET
HIGHWAY DEPARTMENT

MARK	DATE	DESCRIPTION

REVISIONS

PROJECT NO:	J76.001.002
DATE:	JULY 2016
DRAWN BY:	MAR
DESIGNED BY:	JFM
CHECKED BY:	JRF

NO ALTERATION PERMITTED HEREON EXCEPT AS PROVIDED UNDER SECTION 7209 SUBDIVISION 2 OF THE NEW YORK EDUCATION LAW

CIVIL

PLAN

STA TT 12+23
TO
STA TT 17+62

PL2-2

Jul 28, 2016 - 4:07pm
F:\Project\J76 - Town of Inlet\J76001001 - Townsend Trail\CADD\Project Files (Current)\Phase 2\Plan 2.dwg

Copyright ©

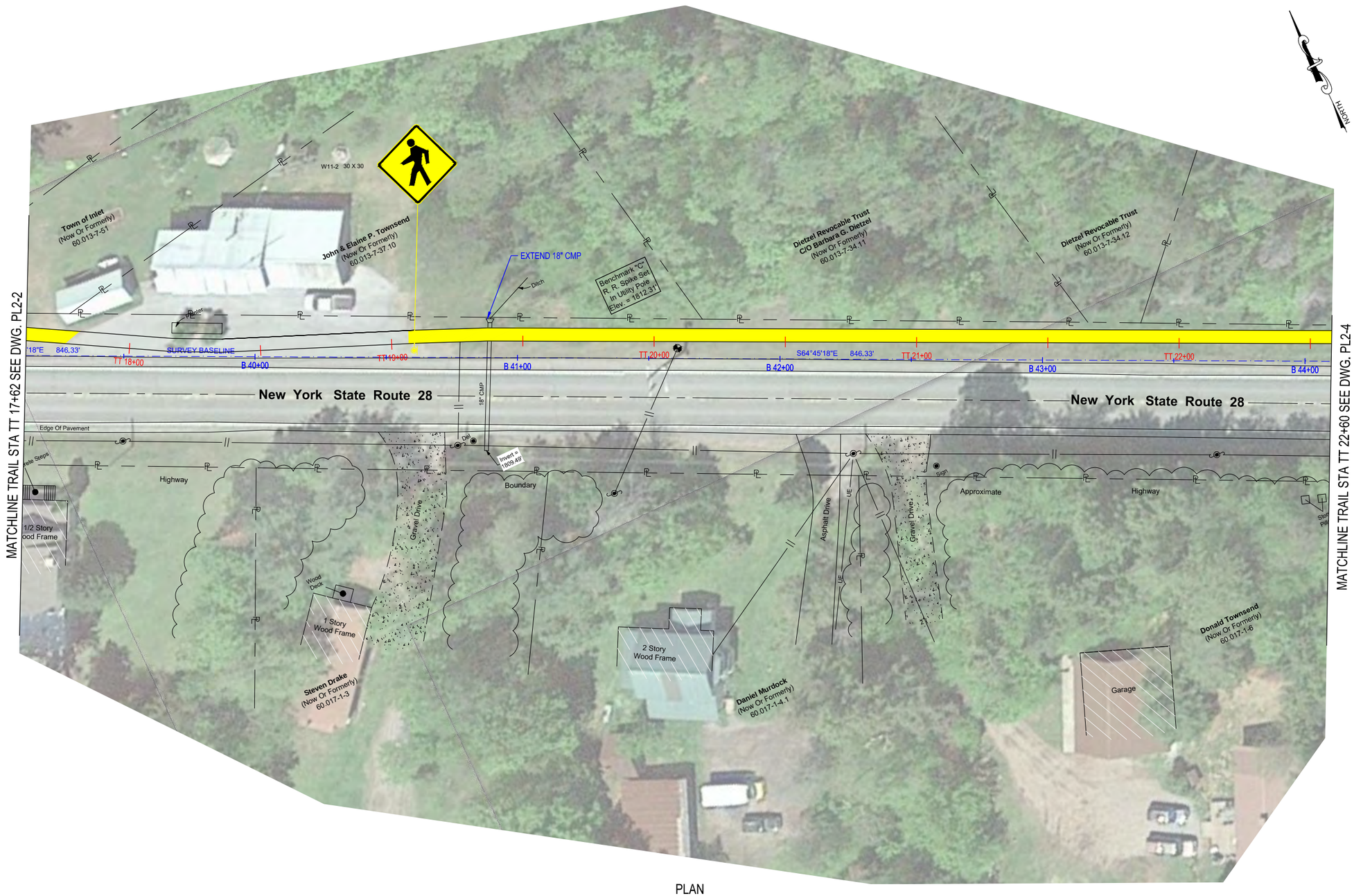

PLAN

0 20' 40'

THE TRAIL ALIGNMENT HAS BEEN SHOWN USING TANGENT SEGMENTS AND INTERSECTION ANGLE POINTS, AS SHOWN BY PI'S (POINT OF INTERSECTIONS). ALL POINTS OF INTERSECTIONS ARE REFERENCED TO NYS PLANE COORDINATES TO FACILITATE STAKEOUT OF THE TRAIL. AT THESE INTERSECTION POINTS, IT IS INTENDED THAT SMALL HORIZONTAL CURVES WILL BE CONSTRUCTED TO REMOVE SHARP ANGLES IN THE FINAL TRAIL. THE TRAIL IS PLANNED TO BE CONSTRUCTED BY THE TOWN OF INLET. THE TOWN WILL DETERMINE WHERE THE CURVES WILL BE CONSTRUCTED.

C&S COMPANIES
C&S Engineers, Inc.
499 Col. Eileen Collins Blvd.
Syracuse, New York 13212
Phone: 315-455-2000
Fax: 315-455-9667
www.cscos.com

STATE OF NEW YORK · JOHN R. FREEMAN · No. 082398 · LICENSED PROFESSIONAL ENGINEER

ELAINE TOWNSEND TRAIL - PHASE 2
TOWN OF INLET
HIGHWAY DEPARTMENT

MARK	DATE	DESCRIPTION

REVISIONS

PROJECT NO:	J76.001.002
DATE:	JULY 2016
DRAWN BY:	MAR
DESIGNED BY:	JFM
CHECKED BY:	JRF

NO ALTERATION PERMITTED HEREON EXCEPT AS PROVIDED UNDER SECTION 7209 SUBDIVISION 2 OF THE NEW YORK EDUCATION LAW

CIVIL

PLAN

STA TT 17+62 TO STA TT 22+60

PL2-3

Jul 28, 2016 - 4:07pm
F:\Projects\J76 - Town of Inlet\J76001001 - Townsend Trail\CADD\Project Files (Current)\Phase 2\Plan 3.dwg

Copyright ©

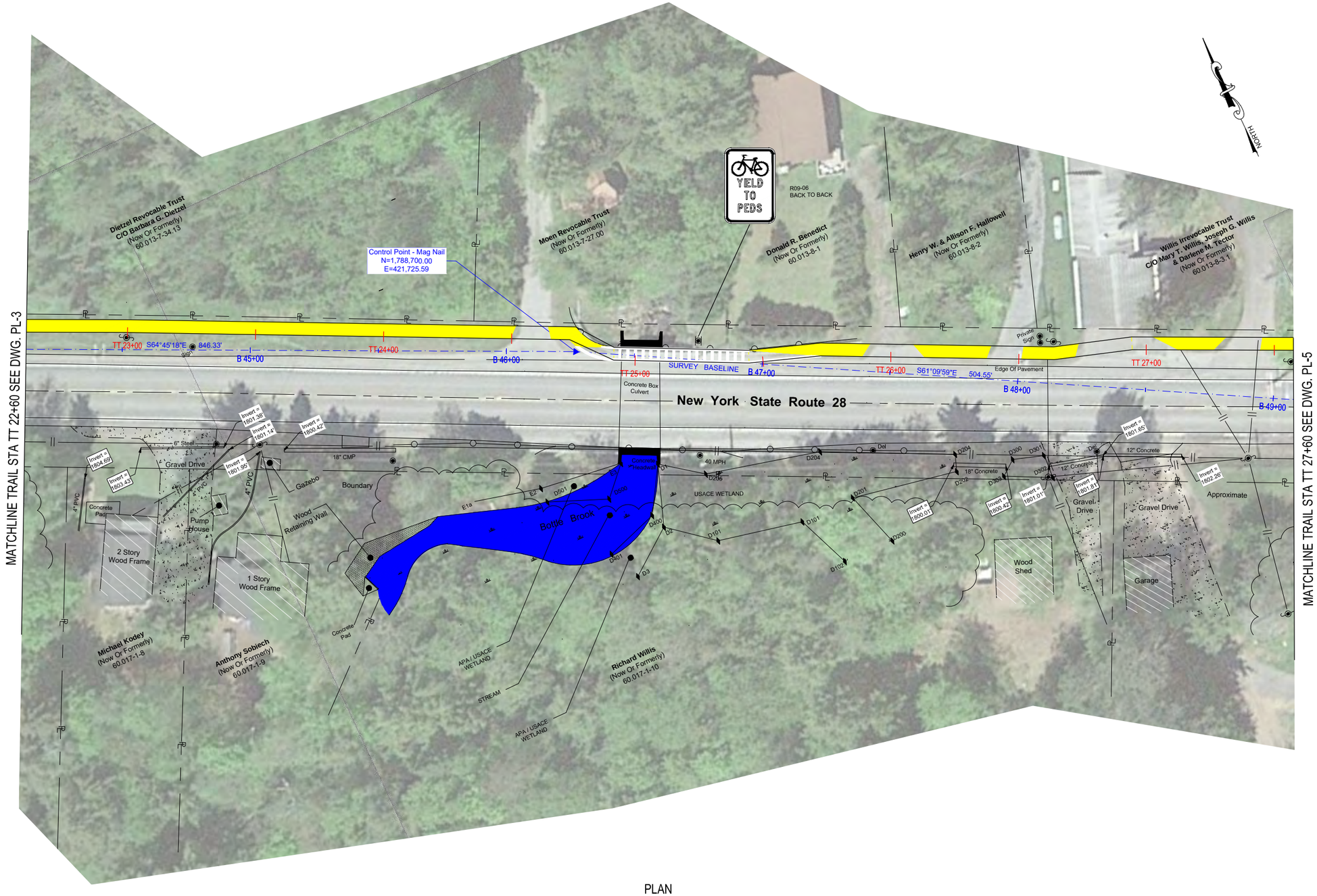

PLAN

0 20' 40'

THE TRAIL ALIGNMENT HAS BEEN SHOWN USING TANGENT SEGMENTS AND INTERSECTION ANGLE POINTS, AS SHOWN BY PI'S (POINT OF INTERSECTIONS) . ALL POINTS OF INTERSECTIONS ARE REFERENCED TO NYS PLANE COORDINATES TO FACILITATE STAKEOUT OF THE TRAIL . AT THESE INTERSECTION POINTS, IT IS INTENDED THAT SMALL HORIZONTAL CURVES WILL BE CONSTRUCTED TO REMOVE SHARP ANGLES IN THE FINAL TRAIL . THE TRAIL IS PLANNED TO BE CONSTRUCTED BY THE TOWN OF INLET. THE TOWN WILL DETERMINE WHERE THE CURVES WILL BE CONSTRUCTED .

C&S COMPANIES
C&S Engineers, Inc.
499 Col. Eileen Collins Blvd.
Syracuse, New York 13212
Phone: 315-455-2000
Fax: 315-455-9667
www.cscos.com

STATE OF NEW YORK · JOHN R. FREEMAN · No. 082398 · LICENSED PROFESSIONAL ENGINEER

ELAINE TOWNSEND TRAIL - PHASE 2
TOWN OF INLET
HIGHWAY DEPARTMENT

MARK	DATE	DESCRIPTION

REVISIONS

PROJECT NO:	J76.001.002
DATE:	JULY 2016
DRAWN BY:	MAR
DESIGNED BY:	JFM
CHECKED BY:	JRF

NO ALTERATION PERMITTED HEREON EXCEPT AS PROVIDED UNDER SECTION 7209 SUBDIVISION 2 OF THE NEW YORK EDUCATION LAW

CIVIL

PLAN

STA TT 22+60 TO STA TT 27+60

PL2-4

Jul 28, 2016 - 4:23pm
P:\Project\J76 - Town of Inlet\J76001001 - Townsend Trail\CADD\Project Files (Current)\Phase 2\Plan 4.dwg

Copyright ©

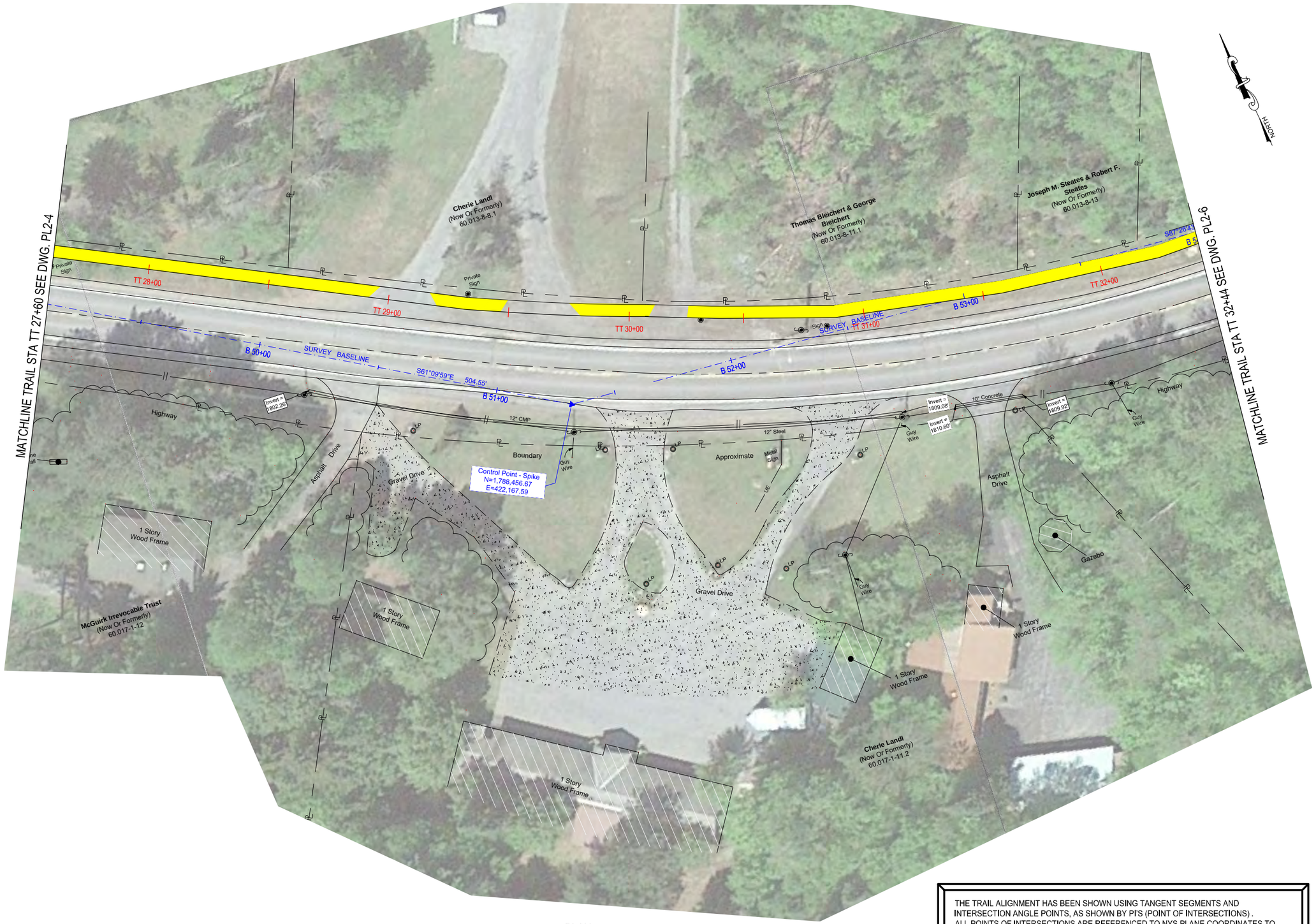

PLAN

0 20' 40'

THE TRAIL ALIGNMENT HAS BEEN SHOWN USING TANGENT SEGMENTS AND INTERSECTION ANGLE POINTS, AS SHOWN BY PI'S (POINT OF INTERSECTIONS). ALL POINTS OF INTERSECTIONS ARE REFERENCED TO NYS PLANE COORDINATES TO FACILITATE STAKEOUT OF THE TRAIL. AT THESE INTERSECTION POINTS, IT IS INTENDED THAT SMALL HORIZONTAL CURVES WILL BE CONSTRUCTED TO REMOVE SHARP ANGLES IN THE FINAL TRAIL. THE TRAIL IS PLANNED TO BE CONSTRUCTED BY THE TOWN OF INLET. THE TOWN WILL DETERMINE WHERE THE CURVES WILL BE CONSTRUCTED.

C&S COMPANIES
C&S Engineers, Inc.
499 Col. Eileen Collins Blvd.
Syracuse, New York 13212
Phone: 315-455-2000
Fax: 315-455-9667
www.cscos.com

STATE OF NEW YORK · JOHN R. FREEMAN · No. 082398 · LICENSED PROFESSIONAL ENGINEER

ELAINE TOWNSEND TRAIL - PHASE 2
TOWN OF INLET
HIGHWAY DEPARTMENT

MARK	DATE	DESCRIPTION

REVISIONS

PROJECT NO:	J76.001.002
DATE:	JULY 2016
DRAWN BY:	MAR
DESIGNED BY:	JFM
CHECKED BY:	JRF

NO ALTERATION PERMITTED HEREON EXCEPT AS PROVIDED UNDER SECTION 7209 SUBDIVISION 2 OF THE NEW YORK EDUCATION LAW

CIVIL

PLAN

STA TT 27+60
TO
STA TT 32+44

PL2-5

Jul 28, 2016 - 4:38pm
F:\Projects\J76 - Town of Inlet\J76001001 - Townsend Trail\CADD\Project Files (Current)\Phase 2\Plan 5.dwg

Copyright ©

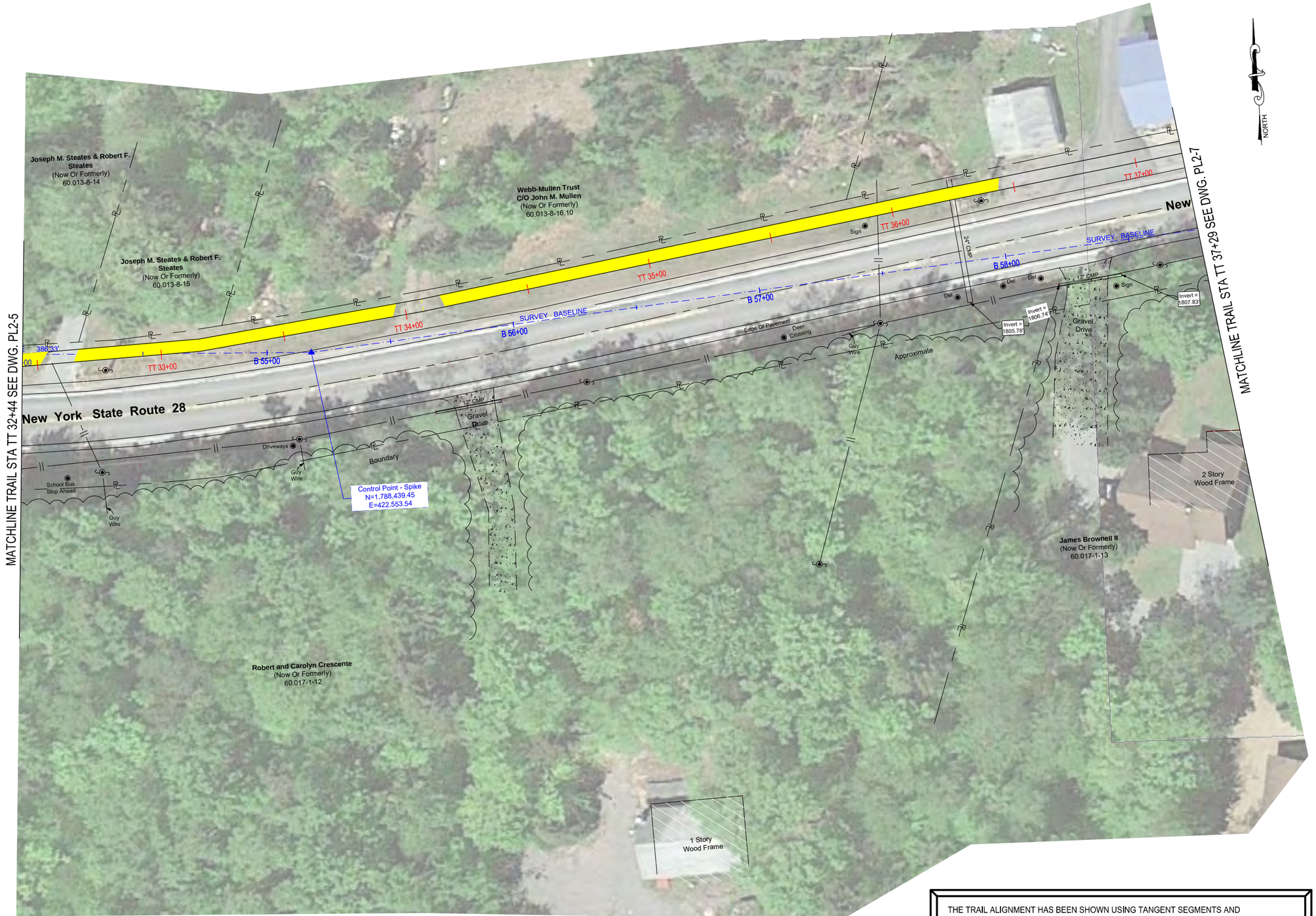

PLAN

0 20' 40'

THE TRAIL ALIGNMENT HAS BEEN SHOWN USING TANGENT SEGMENTS AND INTERSECTION ANGLE POINTS, AS SHOWN BY PI'S (POINT OF INTERSECTIONS) . ALL POINTS OF INTERSECTIONS ARE REFERENCED TO NYS PLANE COORDINATES TO FACILITATE STAKEOUT OF THE TRAIL . AT THESE INTERSECTION POINTS, IT IS INTENDED THAT SMALL HORIZONTAL CURVES WILL BE CONSTRUCTED TO REMOVE SHARP ANGLES IN THE FINAL TRAIL . THE TRAIL IS PLANNED TO BE CONSTRUCTED BY THE TOWN OF INLET. THE TOWN WILL DETERMINE WHERE THE CURVES WILL BE CONSTRUCTED .

C&S COMPANIES
C&S Engineers, Inc.
499 Col. Eileen Collins Blvd.
Syracuse, New York 13212
Phone: 315-455-2000
Fax: 315-455-9667
www.cscos.com

STATE OF NEW YORK · JOHN R. FREEMAN · No. 082398 · LICENSED PROFESSIONAL ENGINEER

ELAINE TOWNSEND TRAIL - PHASE 2
TOWN OF INLET
HIGHWAY DEPARTMENT

MARK	DATE	DESCRIPTION

REVISIONS

PROJECT NO:	J76.001.002
DATE:	JULY 2016
DRAWN BY:	MAR
DESIGNED BY:	JFM
CHECKED BY:	JRF

NO ALTERATION PERMITTED HEREON EXCEPT AS PROVIDED UNDER SECTION 7209 SUBDIVISION 2 OF THE NEW YORK EDUCATION LAW

CIVIL

PLAN

STA TT 32+44
TO
STA TT 37+29

PL2-6

Jul 28, 2016 - 4:09pm
P:\Project\J76 - Town of Inlet\J76001001 - Townsend Trail\CADD\Project Files (Current)\Phase 2\Plan 6.dwg

Copyright ©

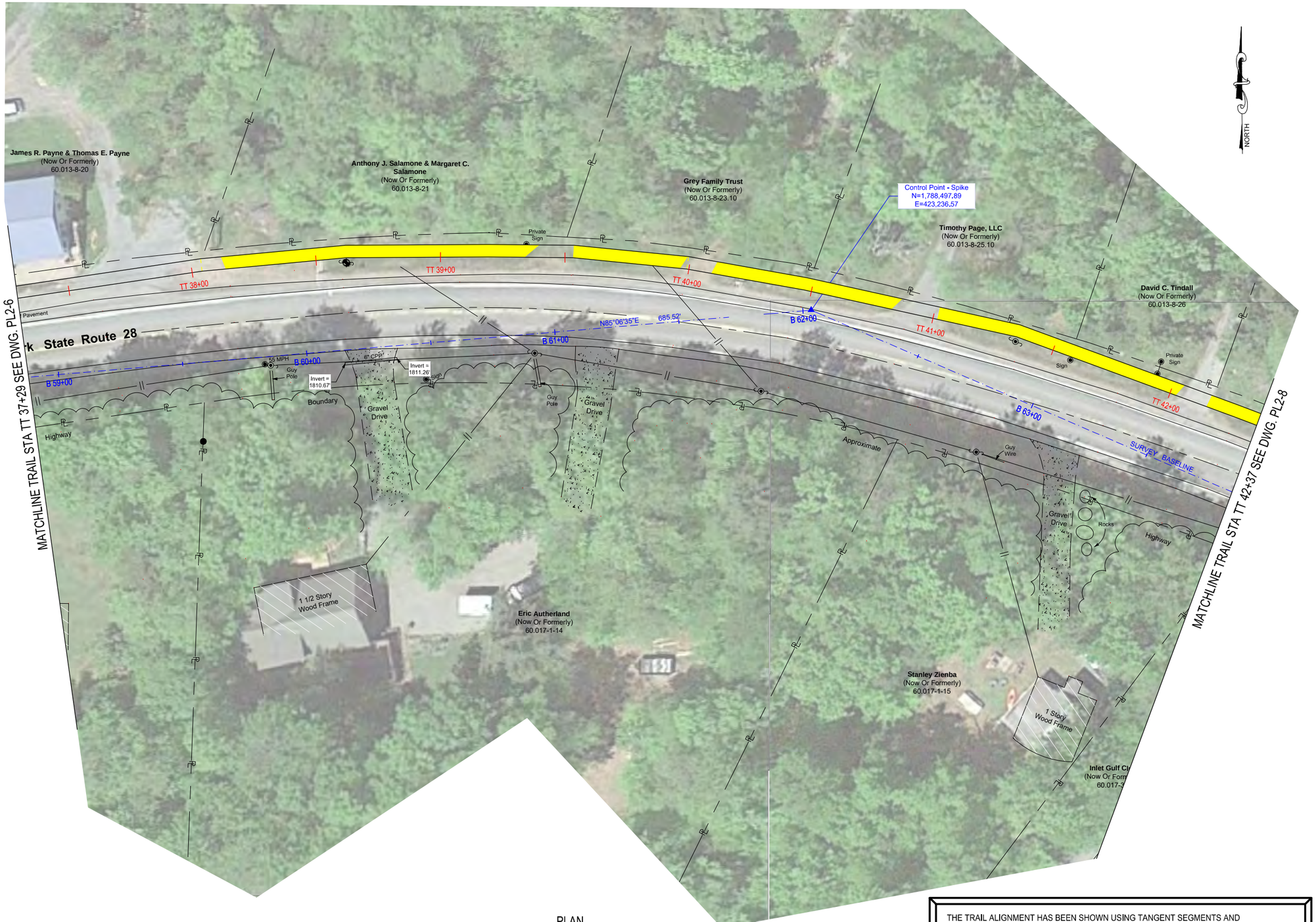

PLAN

0 20' 40'

THE TRAIL ALIGNMENT HAS BEEN SHOWN USING TANGENT SEGMENTS AND INTERSECTION ANGLE POINTS, AS SHOWN BY PI'S (POINT OF INTERSECTIONS) . ALL POINTS OF INTERSECTIONS ARE REFERENCED TO NYS PLANE COORDINATES TO FACILITATE STAKEOUT OF THE TRAIL . AT THESE INTERSECTION POINTS, IT IS INTENDED THAT SMALL HORIZONTAL CURVES WILL BE CONSTRUCTED TO REMOVE SHARP ANGLES IN THE FINAL TRAIL . THE TRAIL IS PLANNED TO BE CONSTRUCTED BY THE TOWN OF INLET. THE TOWN WILL DETERMINE WHERE THE CURVES WILL BE CONSTRUCTED .

C&S COMPANIES
C&S Engineers, Inc.
499 Col. Eileen Collins Blvd.
Syracuse, New York 13212
Phone: 315-455-2000
Fax: 315-455-9667
www.cscos.com

STATE OF NEW YORK · JOHN R. FREEMAN · No. 082398 · LICENSED PROFESSIONAL ENGINEER

ELAINE TOWNSEND TRAIL - PHASE 2
TOWN OF INLET
HIGHWAY DEPARTMENT

MARK	DATE	DESCRIPTION

REVISIONS

PROJECT NO:	J76.001.002
DATE:	JULY 2016
DRAWN BY:	MAR
DESIGNED BY:	JFM
CHECKED BY:	JRF

NO ALTERATION PERMITTED HEREON EXCEPT AS PROVIDED UNDER SECTION 7209 SUBDIVISION 2 OF THE NEW YORK EDUCATION LAW

CIVIL

PLAN

STA TT 37+29
TO
STA TT 42+37

PL2-7

Jul 28, 2016 - 4:10pm
F:\Projects\J76 - Town of Inlet\J76001001 - Townsend Trail\CADD\Project Files (Current)\Phase 2\Plan 7.dwg

Copyright ©

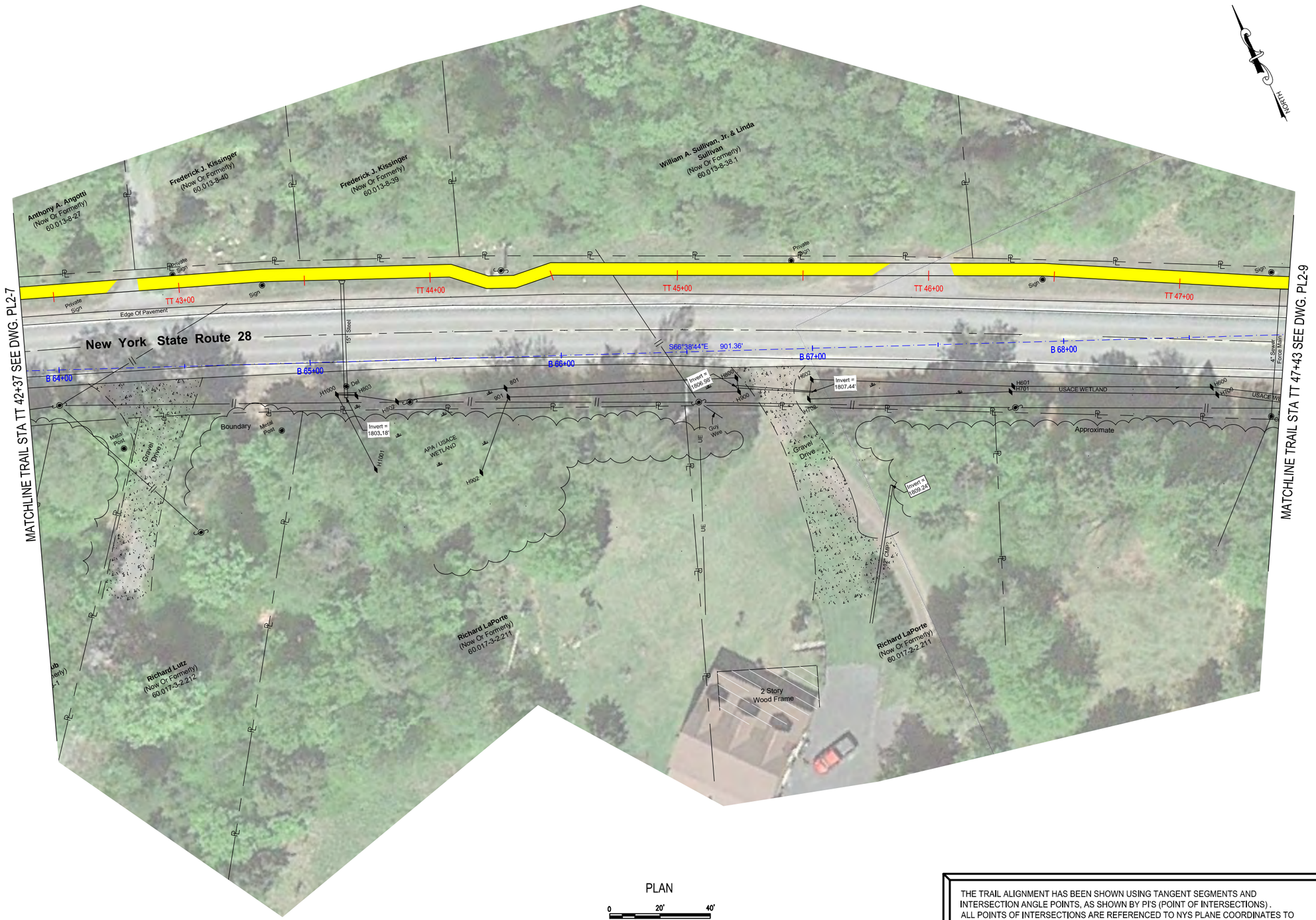

PLAN

0 20' 40'

THE TRAIL ALIGNMENT HAS BEEN SHOWN USING TANGENT SEGMENTS AND INTERSECTION ANGLE POINTS, AS SHOWN BY PI'S (POINT OF INTERSECTIONS). ALL POINTS OF INTERSECTIONS ARE REFERENCED TO NYS PLANE COORDINATES TO FACILITATE STAKEOUT OF THE TRAIL. AT THESE INTERSECTION POINTS, IT IS INTENDED THAT SMALL HORIZONTAL CURVES WILL BE CONSTRUCTED TO REMOVE SHARP ANGLES IN THE FINAL TRAIL. THE TRAIL IS PLANNED TO BE CONSTRUCTED BY THE TOWN OF INLET. THE TOWN WILL DETERMINE WHERE THE CURVES WILL BE CONSTRUCTED.

C&S COMPANIES
C&S Engineers, Inc.
499 Col. Eileen Collins Blvd.
Syracuse, New York 13212
Phone: 315-455-2000
Fax: 315-455-9667
www.cscos.com

STATE OF NEW YORK · JOHN R. FREEMAN · No. 082398 · LICENSED PROFESSIONAL ENGINEER

ELAINE TOWNSEND TRAIL - PHASE 2
TOWN OF INLET
HIGHWAY DEPARTMENT

MARK	DATE	DESCRIPTION

REVISIONS

PROJECT NO:	J76.001.002
DATE:	JULY 2016
DRAWN BY:	MAR
DESIGNED BY:	JFM
CHECKED BY:	JRF

NO ALTERATION PERMITTED HEREON EXCEPT AS PROVIDED UNDER SECTION 7209 SUBDIVISION 2 OF THE NEW YORK EDUCATION LAW

CIVIL

PLAN

STA TT 42+37
TO
STA TT 47+43

PL2-8

Jul 28, 2016 - 4:10pm
F:\Project\J76 - Town of Inlet\J76001001 - Townsend Trail\CADD\Project Files (Current)\Phase 2\Plan 8.dwg

Copyright ©

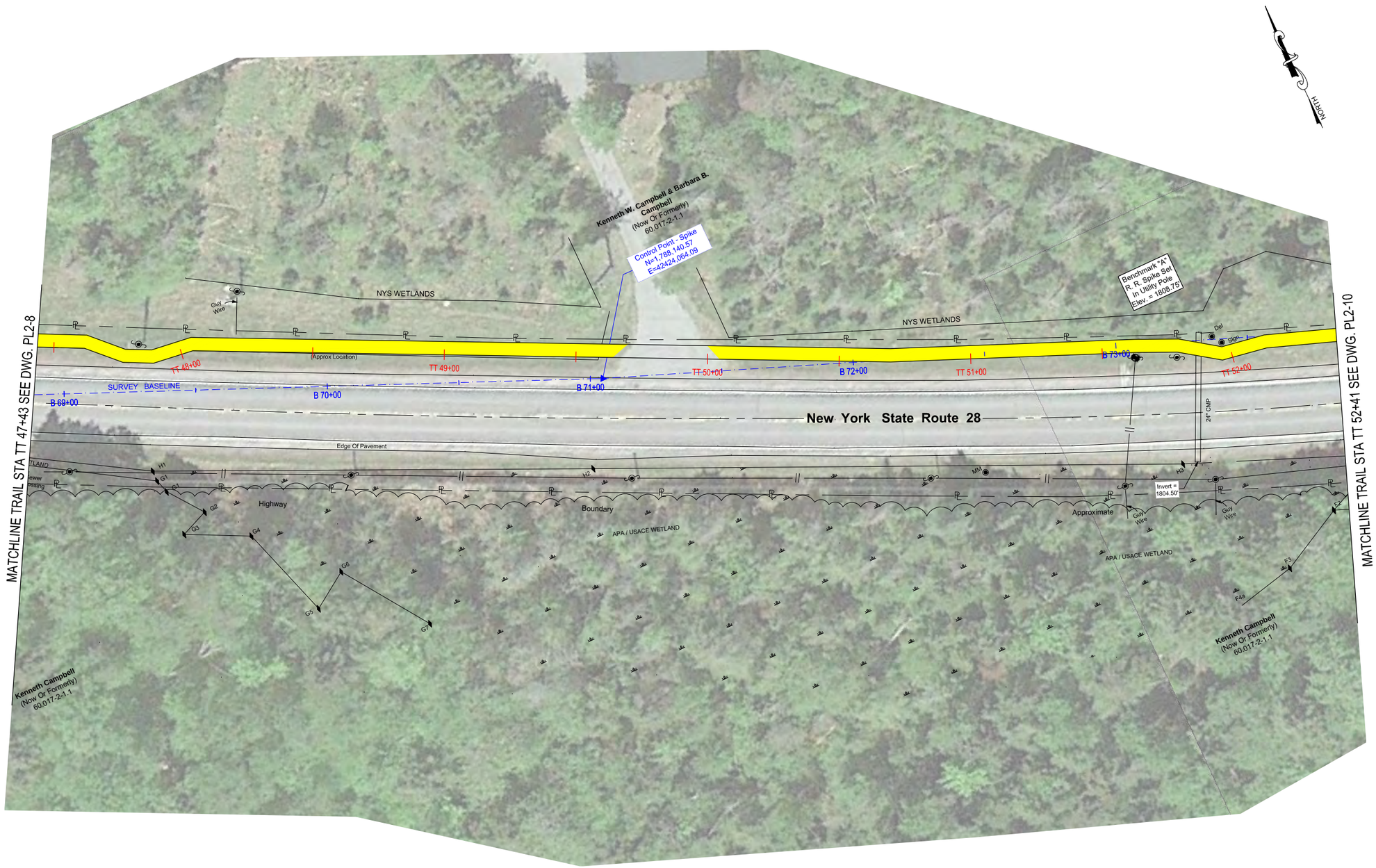

PLAN

0 20' 40'

THE TRAIL ALIGNMENT HAS BEEN SHOWN USING TANGENT SEGMENTS AND INTERSECTION ANGLE POINTS, AS SHOWN BY PI'S (POINT OF INTERSECTIONS). ALL POINTS OF INTERSECTIONS ARE REFERENCED TO NYS PLANE COORDINATES TO FACILITATE STAKEOUT OF THE TRAIL. AT THESE INTERSECTION POINTS, IT IS INTENDED THAT SMALL HORIZONTAL CURVES WILL BE CONSTRUCTED TO REMOVE SHARP ANGLES IN THE FINAL TRAIL. THE TRAIL IS PLANNED TO BE CONSTRUCTED BY THE TOWN OF INLET. THE TOWN WILL DETERMINE WHERE THE CURVES WILL BE CONSTRUCTED.

C&S COMPANIES
C&S Engineers, Inc.
499 Col. Eileen Collins Blvd.
Syracuse, New York 13212
Phone: 315-455-2000
Fax: 315-455-9667
www.cscos.com

STATE OF NEW YORK · JOHN R. FREEMAN · No. 082398 · LICENSED PROFESSIONAL ENGINEER

ELAINE TOWNSEND TRAIL - PHASE 2
TOWN OF INLET
HIGHWAY DEPARTMENT

MARK	DATE	DESCRIPTION

REVISIONS

PROJECT NO:	J76.001.002
DATE:	JULY 2016
DRAWN BY:	MAR
DESIGNED BY:	JFM
CHECKED BY:	JRF

NO ALTERATION PERMITTED HEREON EXCEPT AS PROVIDED UNDER SECTION 7209 SUBDIVISION 2 OF THE NEW YORK EDUCATION LAW

CIVIL

PLAN

STA TT 47+43
TO
STA TT 52+41

PL2-9

Jul 26, 2016 - 4:11pm
F:\Project\J76 - Town of Inlet\J76001001 - Townsend Trail\CADD\Project Files (Current)\Phase 2\Plan 9.dwg

Copyright ©

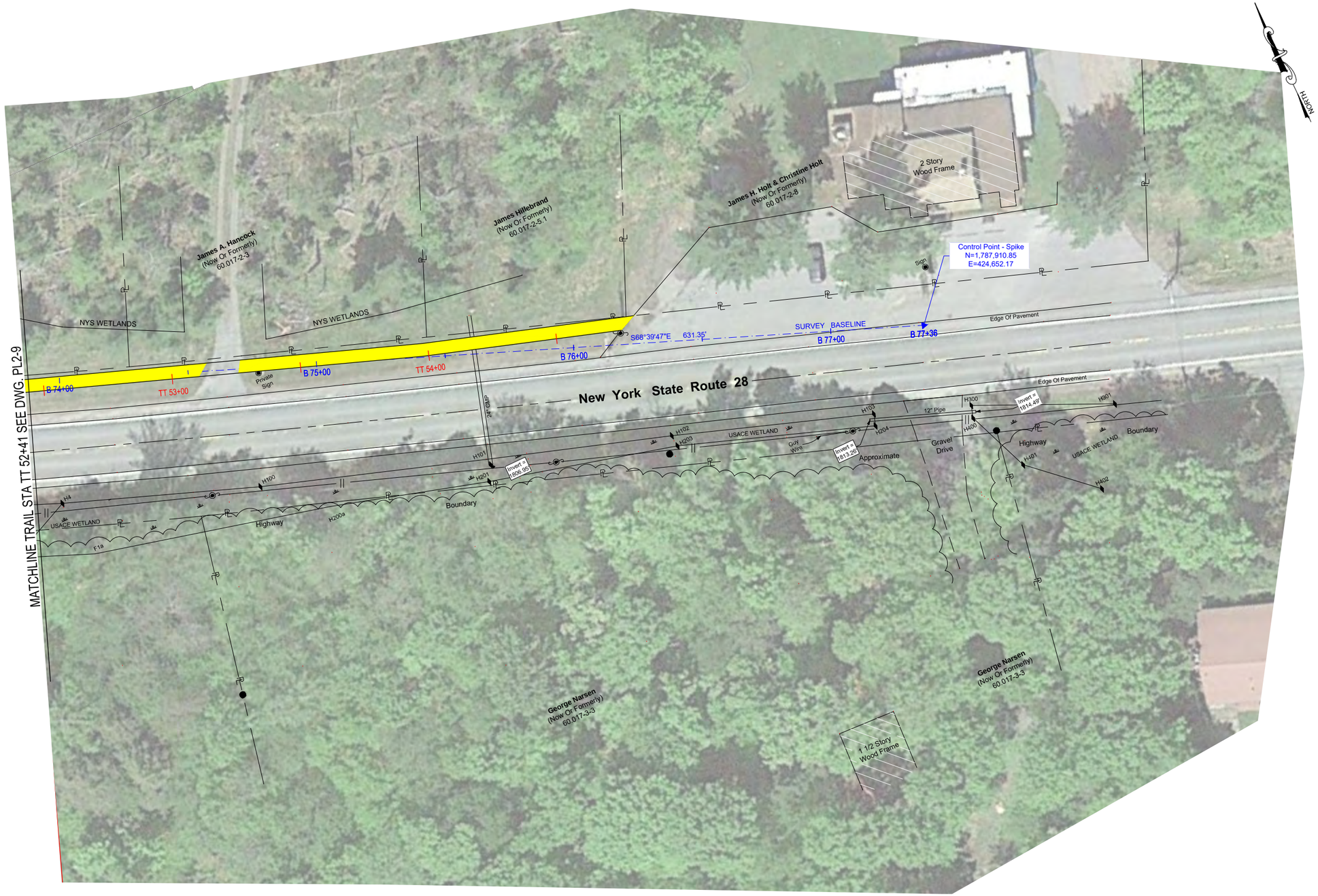

PLAN

0 20' 40'

THE TRAIL ALIGNMENT HAS BEEN SHOWN USING TANGENT SEGMENTS AND INTERSECTION ANGLE POINTS, AS SHOWN BY PI'S (POINT OF INTERSECTIONS). ALL POINTS OF INTERSECTIONS ARE REFERENCED TO NYS PLANE COORDINATES TO FACILITATE STAKEOUT OF THE TRAIL. AT THESE INTERSECTION POINTS, IT IS INTENDED THAT SMALL HORIZONTAL CURVES WILL BE CONSTRUCTED TO REMOVE SHARP ANGLES IN THE FINAL TRAIL. THE TRAIL IS PLANNED TO BE CONSTRUCTED BY THE TOWN OF INLET. THE TOWN WILL DETERMINE WHERE THE CURVES WILL BE CONSTRUCTED.

C&S COMPANIES
C&S Engineers, Inc.
499 Col. Eileen Collins Blvd.
Syracuse, New York 13212
Phone: 315-455-2000
Fax: 315-455-9667
www.cscos.com

STATE OF NEW YORK · JOHN R. FREEMAN · No. 082398 · LICENSED PROFESSIONAL ENGINEER

ELAINE TOWNSEND TRAIL - PHASE 2
TOWN OF INLET
HIGHWAY DEPARTMENT

MARK	DATE	DESCRIPTION

REVISIONS

PROJECT NO:	J76.001.002
DATE:	JULY 2016
DRAWN BY:	MAR
DESIGNED BY:	JFM
CHECKED BY:	JRF

NO ALTERATION PERMITTED HEREON EXCEPT AS PROVIDED UNDER SECTION 7209 SUBDIVISION 2 OF THE NEW YORK EDUCATION LAW

CIVIL

PLAN

STA TT 52+41
TO
STA xx+xx

PL2-10

Jul 28, 2016 - 4:11pm
F:\Project\J76 - Town of Inlet\J76001001 - Townsend Trail\CADD\Project Files (Current)\Phase 2\Plan 10.dwg

Copyright ©

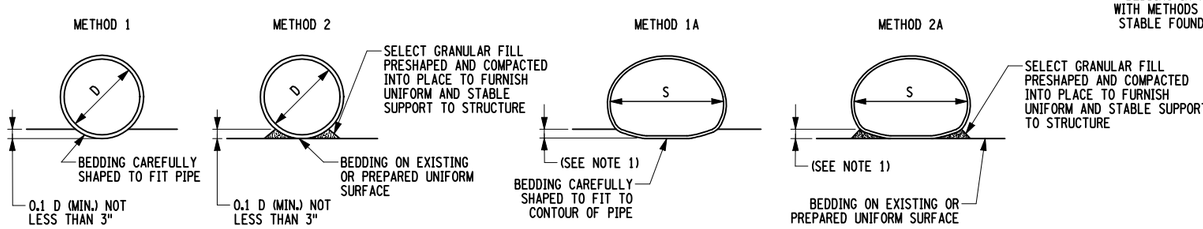

STABLE FOUNDATION SOIL

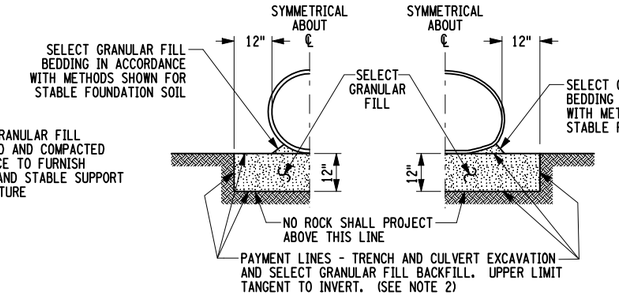

ROCK FOUNDATION

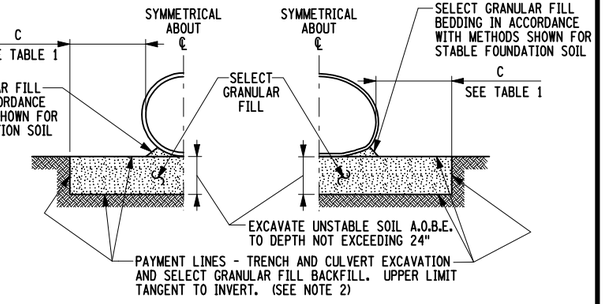

UNSTABLE FOUNDATION SOIL
(SEE NOTE 4)

BEDDING DETAILS

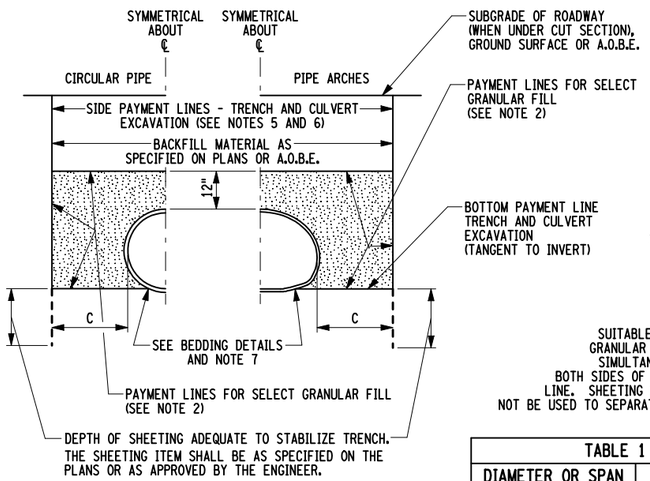

INSTALLATION METHOD A
PIPES INSTALLED BELOW GROUND SURFACE

TABLE 1	
DIAMETER OR SPAN	"C"
UP THRU 24"	D - ROUND PIPE S - PIPE ARCHES
> 24" TO 144"	24"
> 144"	60"

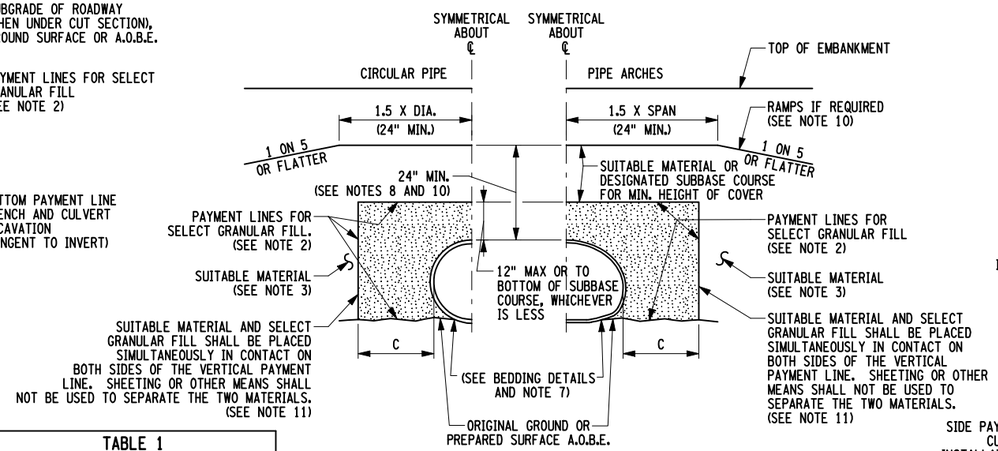

INSTALLATION METHOD B-1

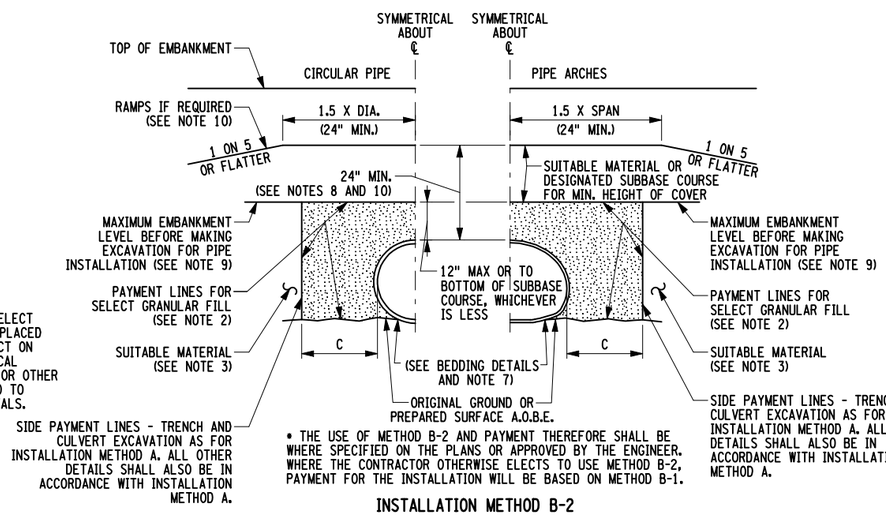

* THE USE OF METHOD B-2 AND PAYMENT THEREFORE SHALL BE WHERE SPECIFIED ON THE PLANS OR APPROVED BY THE ENGINEER. WHERE THE CONTRACTOR OTHERWISE ELECTS TO USE METHOD B-2, PAYMENT FOR THE INSTALLATION WILL BE BASED ON METHOD B-1.

INSTALLATION METHOD B-2

PIPES INSTALLED AT OR ABOVE GROUND SURFACE

INSTALLATION METHODS

GENERAL NOTES:

1. THE MINIMUM DEPTH OF BEDDING SHALL BE 3" FOR CORRUGATED METAL PIPE-ARCHES. STRUCTURAL PLATE PIPE-ARCHES SHALL BE BEDDED FOR THE FULL WIDTH OF BOTTOM PLATES.
2. COMPACTION REQUIREMENTS SHALL CONFORM TO §203-3.15, "FILL AND BACKFILL AT STRUCTURES, CULVERTS, PIPES, CONDUITS, AND DIRECT BURIAL CABLES".
3. COMPACTION REQUIREMENTS SHALL CONFORM TO §203-3.12, "COMPACTION".
4. TO BE USED WHERE IN THE OPINION OF THE ENGINEER THE FOUNDATION SOIL REQUIRES A LAYER OF GRANULAR MATERIAL TO FURNISH STABLE BEDDING CONDITIONS. THIS DETAIL DOES NOT APPLY WHERE UNSUITABLE MATERIAL EXISTS AT OR BELOW INVERT ELEVATION. SPECIAL DESIGN FEATURES AND CONSTRUCTION TREATMENT BASED ON SUBSURFACE EXPLORATIONS ARE NECESSARY IN LOCATIONS WHERE UNSUITABLE MATERIAL EXISTS. SEE NOTE 7.
5. FOR A PIPE TO BE INSTALLED IN A ROCK TRENCH, THE PAYMENT LINES FOR EXCAVATION (SIDES OF TRENCH) SHALL BE THE SAME AS SHOWN FOR INSTALLATION METHOD A. THE PAYMENT LINE FOR DEPTH OF EXCAVATION AND SELECT GRANULAR FILL BEDDING SHALL BE AS SHOWN FOR "ROCK FOUNDATION BEDDING DETAILS".
6. WHERE A GENERAL EXCAVATION OF UNSUITABLE OR UNSTABLE MATERIAL IS REQUIRED TO EXTEND BEYOND THE LATERAL AND DEPTH LIMITS INDICATED FOR METHOD A, THAT EXCAVATION WITHIN THE LIMITS SHOWN IN THE AFOREMENTIONED DETAIL SHALL BE PAID FOR UNDER ITEM 203.02 RATHER THAN ITEM 206.02. THE CULVERT INSTALLATION SHALL THEN BE MADE IN ACCORDANCE WITH THE DETAILS FOR METHOD B-1 OR B-2 AS DIRECTED BY THE ENGINEER UNLESS OTHERWISE SHOWN ON THE PLANS.
7. WHERE UNSUITABLE MATERIAL NOT ANTICIPATED IN DESIGN IS ENCOUNTERED AT OR BELOW INVERT ELEVATION, THE TREATMENT OF SUCH CONDITIONS SHALL BE A.O.B.E. BASED ON THE RESULTS OF SUBSURFACE EXPLORATIONS.
8. SEE "PROOF ROLLING" RESTRICTIONS UNDER §203-3.13E, "PROOF ROLLING IN EMBANKMENT SECTIONS - EXCEPTIONS".
9. A LOWER EMBANKMENT LEVEL MAY BE SPECIFIED BY THE ENGINEER FOR INITIATING THE EXCAVATION FOR THE PIPE WHERE A STABLE "WORKING PLATFORM" MUST FIRST BE ESTABLISHED OVER A SUBMERGED, UNSTABLE OR YIELDING SURFACE. IN THIS CASE THE REMAINDER OF THE INSTALLATION ABOVE THE "WORKING PLATFORM" SHALL BE IN CONFORMANCE WITH METHOD B-1.
10. WHERE CONSTRUCTION EQUIPMENT IS TO BE ALLOWED TO CROSS OVER A PIPE INSTALLATION BEFORE PLACEMENT OF ADEQUATE PROTECTIVE COVER OF EMBANKMENT MATERIAL, RAMPS SHALL BE CONSTRUCTED AS SHOWN ABOVE AND COMPACTED UNDER §203-3.12, "COMPACTION". RAMPS WHICH CANNOT BE UTILIZED AS PART OF THE COMPLETED EMBANKMENT SHALL BE INSTALLED AND REMOVED AT THE CONTRACTOR'S EXPENSE. MOVEMENT OF CONSTRUCTION EQUIPMENT AND OTHER VEHICLES OVER ANY CULVERT PIPE SHALL BE DONE AT THE CONTRACTOR'S RISK. ANY STRUCTURE DAMAGED OR DISTURBED THEREBY SHALL BE REPLACED AT NO EXPENSE TO THE STATE, AS DIRECTED BY THE ENGINEER.
11. THE CONTRACTOR, WITH THE APPROVAL OF THE ENGINEER, MAY PLACE A TRAPEZOIDAL SECTION OF SELECT GRANULAR FILL AROUND THE PIPE IN LIEU OF SIMULTANEOUS PLACEMENT WITH SUITABLE MATERIAL. THE MINIMUM DIMENSIONS OF THE SELECT GRANULAR FILL TRAPEZOID SHALL BE SUCH AS TO ENCOMPASS THE PAYMENT LINES FOR THIS MATERIAL SHOWN ON INSTALLATION METHOD B-1. NO PAYMENT WILL BE MADE UNDER THIS OPTION FOR SELECT GRANULAR FILL PLACED OUTSIDE THE LIMITS OF INSTALLATION METHOD B-1.
12. WHEN MODIFICATIONS OF THIS SHEET ARE USED IN THE PLANS, THE METHODS SHOWN HEREON SHALL ALSO APPLY TO THOSE MODIFICATIONS.
13. FLARED METAL END SECTION TO BE USED AT OUTLET OF UNDERDRAIN WHERE SHOWN ON PLANS OR SPECIFIED BY THE ENGINEER.

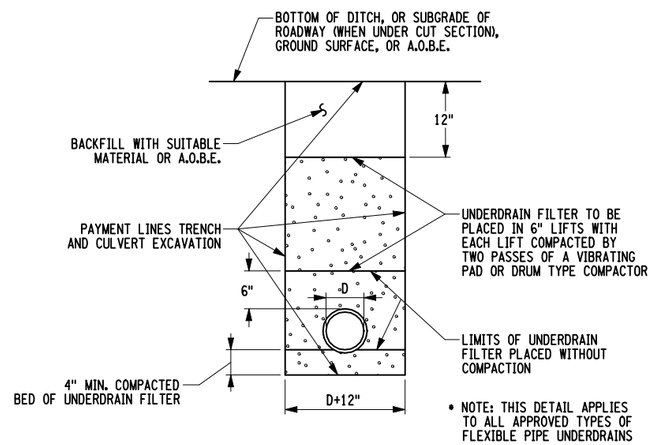

* NOTE: THIS DETAIL APPLIES TO ALL APPROVED TYPES OF FLEXIBLE PIPE UNDERDRAINS

PERFORATED CORRUGATED METAL PIPE UNDERDRAIN BEDDING AND BACKFILL DETAILS FOR TRENCH INSTALLATION *

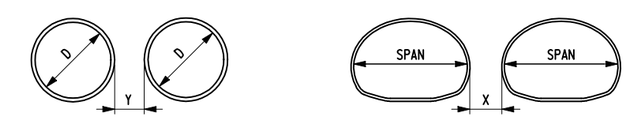

DIAMETER	MINIMUM DISTANCE (Y)
UP TO 48"	24"
> 48" TO 72"	36"
> 72"	1/2 DIA.

DIAMETER	MINIMUM DISTANCE (X)
UP TO 72"	36"
> 72" TO 95"	48"
> 95"	1/2 SPAN

CLEARANCE REQUIREMENTS FOR MULTIPLE INSTALLATIONS

STATE OF NEW YORK
DEPARTMENT OF TRANSPORTATION

U.S. CUSTOMARY STANDARD SHEET

INSTALLATION DETAILS FOR CORRUGATED AND STRUCTURAL PLATE PIPE AND PIPE ARCHES

APPROVED OCTOBER 01, 2008
/S/ ROBERT L. SACK, P.E.
DEPUTY CHIEF ENGINEER (TECHNICAL SERVICES)

ISSUED UNDER EB 08-036

203-05

EFFECTIVE DATE: 01/08/09

FILE NAME = 203-05.dgn
DATE/TIME = 31-AUG-2009 09:05
USER = rlohse

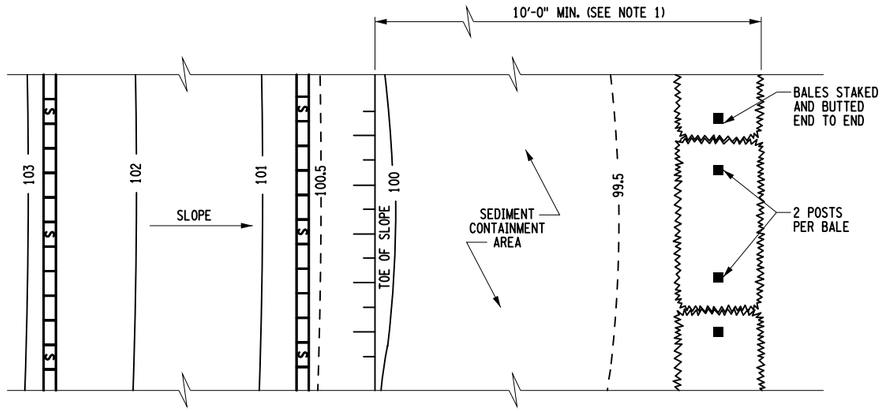

PLAN

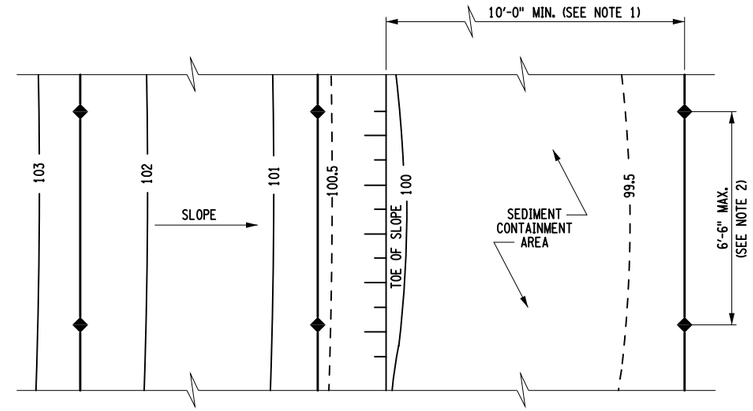

PLAN

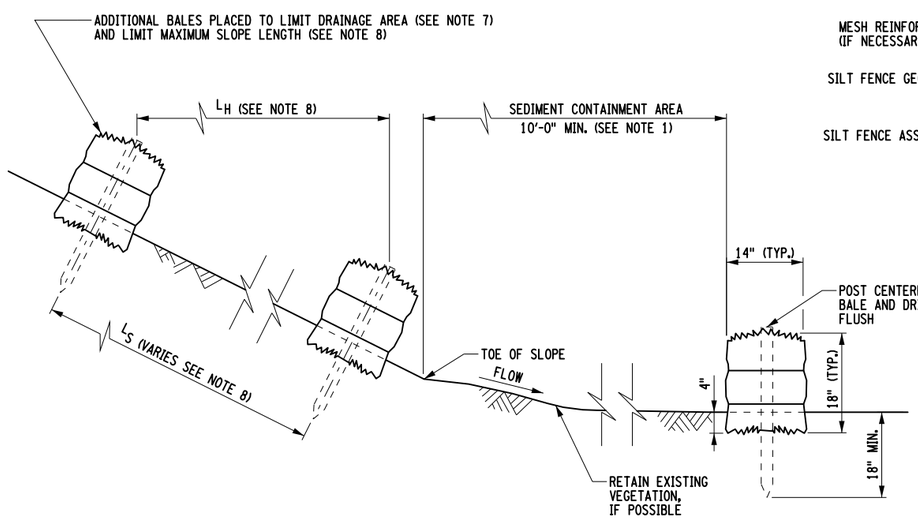

SECTION
STRAWBALE DIKE - TEMPORARY

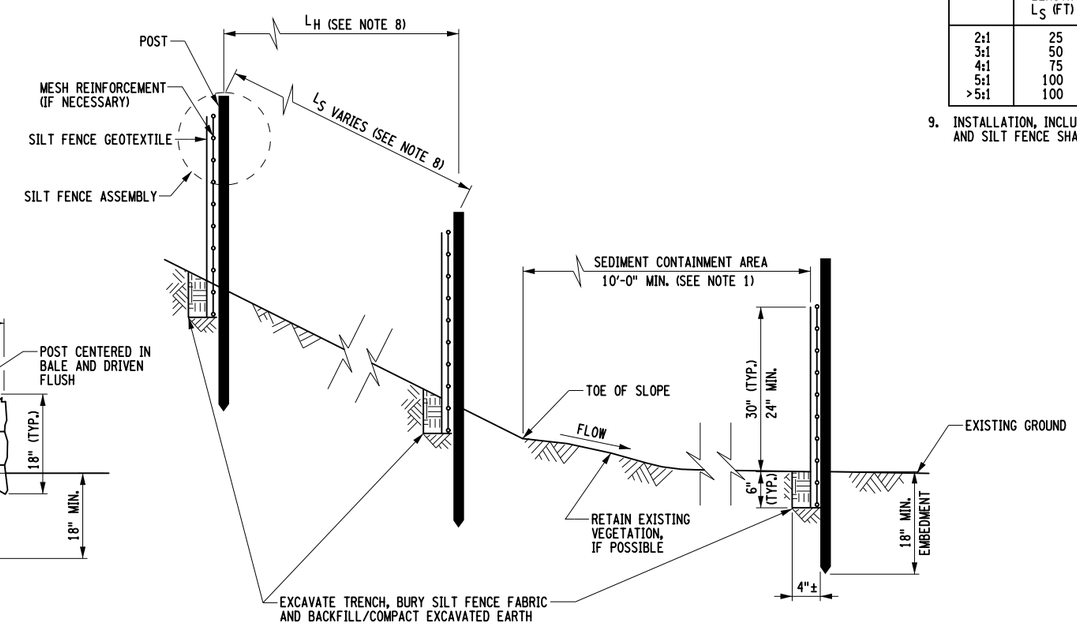

SECTION
SILT FENCE - TEMPORARY

APPLICATION NOTES

A. THE PRIMARY PURPOSE OF A SILT FENCE OR STRAWBALE DIKE IS TO REDUCE RUNOFF VELOCITY AND TRAP SEDIMENT. VELOCITY IS REDUCED, WATER IS IMPOUNDED BEHIND THE MEASURE, AND SEDIMENT FALLS OUT OF SUSPENSION.

B. SILT FENCE OR STRAWBALE DIKE SHALL BE INSTALLED ON A LINE OF EQUAL ELEVATION (CONTOUR). THEY MAY BE INSTALLED AT INTERMEDIATE POINTS UP SLOPES AS WELL AS AT THE BOTTOM, AS SHOWN IN THE DETAIL.

C. STRAWBALE DIKE OR SILT FENCE SHALL NOT BE USED IN OR ACROSS A FLOWING NATURAL CHANNEL, OR AREAS OF CONCENTRATED FLOW.

GENERAL NOTES

1. SILT FENCE OR STRAWBALE DIKE SHALL BE PLACED A MINIMUM OF 10'-0" FROM TOE OF SLOPE, TO PROVIDE ADEQUATE AREA FOR SEDIMENT STORAGE AND FACILITATE MAINTENANCE OF SEDIMENT CONTAINMENT AREA.

2. POSTS MAY BE 1¼" X 1¼" (MIN.) HARDWOOD, 1½" X 3½" (MIN.) SOFTWOOD, OR 1.3 LB/FT (MIN.) STEEL. SPACING FOR THE PROVIDED SILT FENCE SHALL BE AS DESIGNATED ON THE DEPARTMENT APPROVED LIST FOR SILT FENCE.

3. BALES FOR DIKE SHALL BE INSTALLED WITH CUT ENDS VERTICAL, AND BALES BURIED A MINIMUM OF 4".

4. THE BOTTOM EDGE OF SILT FENCE SHALL BE BURIED A MINIMUM OF 6" BELOW GROUND. THE FENCE SHALL BE INSTALLED WITH THE POSTS ON THE DOWNSTREAM SIDE OF THE FABRIC.

5. MEASURES SHALL BE INSPECTED EVERY SEVEN (7) CALENDAR DAYS OR AFTER EACH RAINFALL OF ½" OR MORE WITHIN A 24 HOUR PERIOD. MEASURES SHALL BE CLEANED AND REPAIRED AS REQUIRED.

6. SEDIMENT SHALL BE REMOVED WHEN ACCUMULATION REACHES ONE-HALF OF THE MEASURE HEIGHT. SEDIMENT SHALL BE DISPOSED OF AS UNSUITABLE MATERIAL.

7. DRAINAGE AREAS:
MAXIMUM DRAINAGE AREA TRIBUTARY TO 100'-0" OF SILT FENCE SHALL BE ¼ ACRE.
MAXIMUM DRAINAGE AREA TRIBUTARY TO 100'-0" OF STRAWBALE DIKE SHALL BE ¼ ACRE.

8. THE FOLLOWING ARE MAXIMUM SLOPE LENGTHS TO THESE MEASURES:

SILT FENCE / STRAWBALE DIKE		
SLOPE	SLOPE LENGTH L_S (FT)	HORIZ LENGTH L_H (FT)
2:1	25	22
3:1	50	47
4:1	75	73
5:1	100	98
>5:1	100	98

9. INSTALLATION, INCLUDING EXCAVATION, BACKFILL, AND COMPACTION OF STRAWBALE DIKES AND SILT FENCE SHALL BE INCLUDED IN THE UNIT PRICE BID FOR ITEM.

STATE OF NEW YORK
DEPARTMENT OF TRANSPORTATION

U.S. CUSTOMARY STANDARD SHEET

LINEAR MEASURES

APPROVED FEBRUARY 09, 2010
/S/ RICHARD W. LEE, P.E.
FOR THE DEPUTY CHIEF ENGINEER (DESIGN)

ISSUED UNDER EB 09-036

209-01

EFFECTIVE DATE: 09/02/2010

FILE NAME = 209-01.dgn
DATE/TIME = 22-NOV-2011 10:13
USER = r.lohse

CORRUGATED METAL PIPE

PIPE DIA.	END SECTION GAUGE AND DIMENSIONS						APPROX. SLOPE	BODY PIECES (NOTE 4)	TOE PLATE EXTENSION	
	GAUGE	A 1"±	B 1"±	H 1"±	L 1½"±	W 2"±			DEPTH	LENGTH 2"±
12"	16	6"	6"	6"	21"	24"	2-1/2	1 OR 2	8"	34"
15"	16	7"	8"	6"	26"	30"	2-1/2	1 OR 2	8"	40"
18"	16	8"	10"	6"	31"	36"	2-1/2	1 OR 2	8"	46"
21"	16	9"	12"	6"	36"	42"	2-1/2	1 OR 2	8"	52"
24"	16	10"	13"	6"	41"	48"	2-1/2	1 OR 2	8"	58"
30"	14	12"	16"	8"	51"	60"	2-1/2	1 OR 2	8"	70"
36"	14	14"	19"	9"	60"	72"	2-1/2	1 OR 2	8"	92"
42"	12	16"	22"	11"	69"	84"	2-1/2	1 OR 2	8"	104"
48"	12	18"	27"	12"	78"	90"	2-1/4	1, 2 OR 3	8"	110"
54"	12	18"	30"	12"	84"	102"	2	1, 2 OR 3	8"	122"
60"	12	18"	33"	12"	87"	114"	1-3/4	3	12"	134"
66"	12	18"	36"	12"	87"	120"	1-1/2	3	12"	140"
72"	12	18"	39"	12"	87"	126"	1-1/3	3	12"	146"
78"	12	18"	42"	12"	87"	132"	1-1/4	3	12"	152"
84"	12	18"	45"	12"	87"	138"	1-1/6	3	12"	158"
90"	12	24"	37"	12"	87"	144"	1-1/2	3	12"	164"
96"	12	25"	35"	12"	87"	150"	1-1/2	3	12"	170"

CORRUGATED METAL PIPE ARCH

2⅔" X ½" CORRUGATION	3" X 1" OR 5" X 1" CORRUGATION	END SECTION GAUGE AND DIMENSIONS						APPROX. SLOPE	BODY PIECES (NOTE 4)	TOE PLATE EXTENSION	
SPAN AND RISE	SPAN AND RISE	GAUGE	A 1"±	B 1"±	H 1"±	L 1½"±	W 2"±			DEPTH	LENGTH 2"±
17" X 13"		16	7"	9"	6"	19"	30"	2-1/2	1 OR 2	8"	40"
21" X 15"		16	7"	10"	6"	23"	36"	2-1/2	1 OR 2	8"	46"
24" X 18"		16	8"	12"	6"	28"	42"	2-1/2	1 OR 2	8"	52"
28" X 20"		16	9"	14"	6"	32"	48"	2-1/2	1 OR 2	8"	58"
35" X 24"		14	10"	16"	6"	39"	60"	2-1/2	1 OR 2	8"	70"
42" X 29"		14	12"	18"	8"	46"	75"	2-1/2	1 OR 2	8"	85"
49" X 33"		12	13"	21"	9"	53"	85"	2-1/2	1 OR 2	8"	105"
57" X 38"		12	18"	26"	12"	63"	90"	2-1/2	1, 2 OR 3	8"	110"
64" X 43"	60" X 46"	12	18"	30"	12"	70"	102"	2-1/4	1, 2 OR 3	8"	122"
71" X 47"	66" X 51"	12	18"	33"	12"	77"	114"	2-1/4	3	8"	134"
77" X 52"	73" X 55"	12	18"	36"	12"	77"	126"	2	3	12"	146"
83" X 57"	81" X 59"	12	18"	39"	12"	77"	138"	2	3	12"	158"
	87" X 63"	12	22"	38"	12"	77"	148"	1-1/2	3	12"	168"
	95" X 67"	12	22"	34"	12"	77"	162"	1-1/2	3	12"	182"
	103" X 71"	12	22"	38"	12"	77"	174"	1-1/2	3	12"	194"
	112" X 75"	12	24"	40"	12"	77"	174"	1-1/2	3	12"	194"

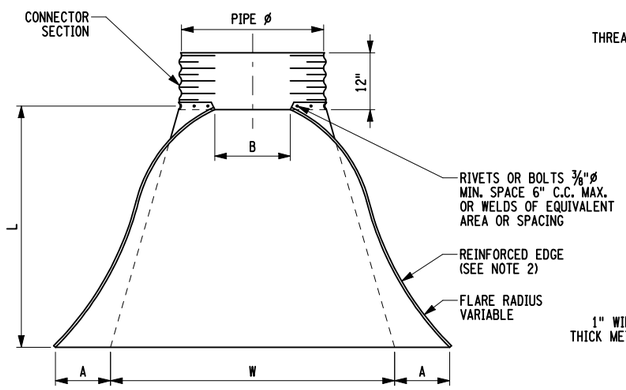

PLAN
WITH CONNECTOR SECTION SHOWN FOR ALL SIZES THIS SHEET

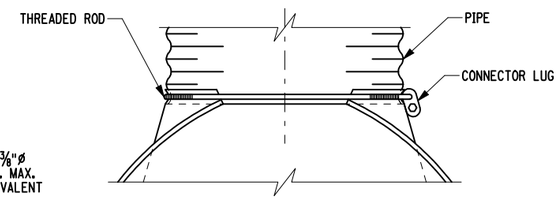

THREADED ROD CONNECTION
FOR 12"ø THRU 24"ø

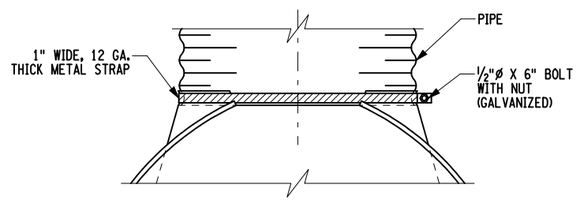

METAL STRAP CONNECTION
FOR 12"ø THRU 24"ø (SEE NOTE 5)

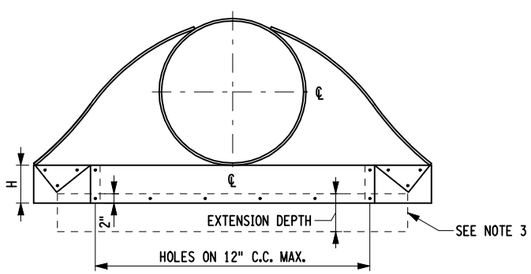

ELEVATION

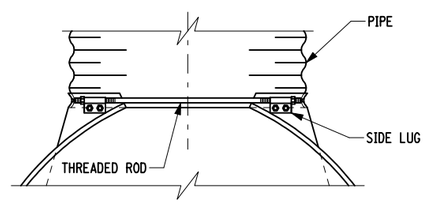

THREADED ROD CONNECTION
FOR 54"ø AND SMALLER

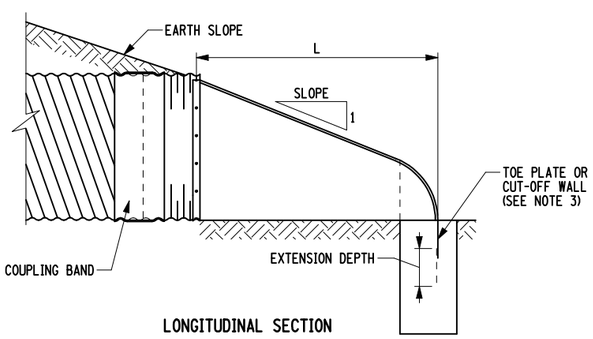

LONGITUDINAL SECTION
WITH CONNECTOR SECTION SHOWN FOR ALL SIZES THIS SHEET

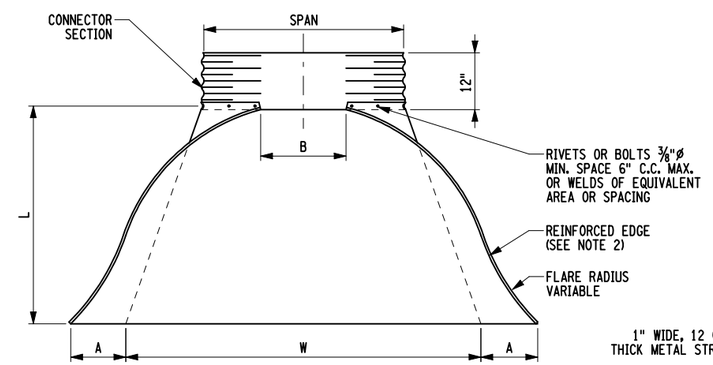

PLAN
WITH CONNECTOR SECTION SHOWN FOR ALL SIZES THIS SHEET

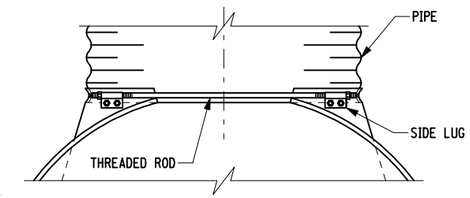

THREADED ROD CONNECTION
FOR 64" X 43" AND SMALLER PIPE ARCHES (2⅔ X ½) AND 60" X 46" AND SMALLER PIPE ARCHES (3 X 1)

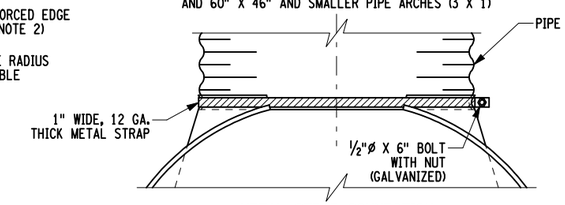

METAL STRAP CONNECTION
FOR 28" X 20" ARCHES AND SMALLER (SEE NOTE 6)

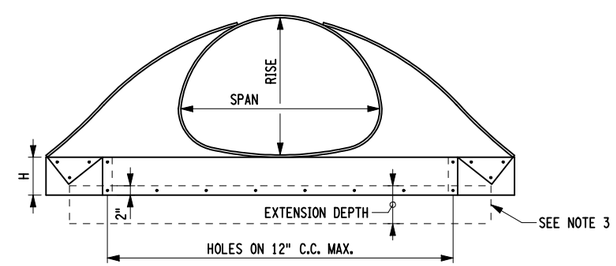

ELEVATION

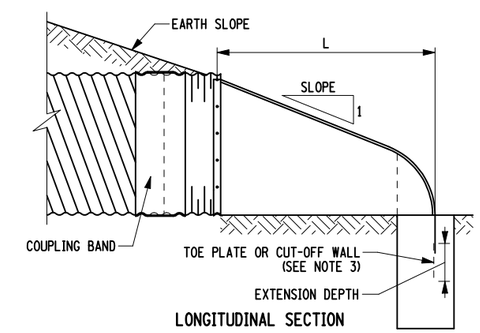

LONGITUDINAL SECTION
WITH CONNECTOR SECTION SHOWN FOR ALL SIZES THIS SHEET

NOTES:

1. ALL PIPES AND PIPE ARCHES WHOSE DIMENSIONS ARE LARGER THAN THOSE LISTED BELOW SHALL HAVE 12 GA. SIDES AND 10 GA. CENTER PANELS:
   PIPES - 54", PIPE ARCHES - 64" X 43" (2⅔ X ½), 60" X 46" (3 X 1 OR 5 X 1).
   PIPES AND PIPE ARCHES WHOSE DIMENSIONS ARE EQUAL TO OR SMALLER THAN THOSE LISTED ABOVE, WHICH ARE ALLOWED TO BE ASSEMBLED FROM 3 PIECES, SHALL HAVE 12 GA. SIDES AND 10 GA. CENTER PANELS.
2. REINFORCED EDGES SHALL BE SUPPLEMENTED WITH STIFFENER ANGLES FOR THE FOLLOWING PIPES AND PIPE ARCHES:
   PIPES - 60" OR LARGER, PIPE ARCHES - 77" X 52" (2⅔ X ½), 73" X 55" (3 X 1 OR 5 X 1). THE ANGLES SHALL BE THE SAME BASE METAL AS THE END SECTION AND SHALL BE 2" X 2" X ¼" FOR 60" THRU 72" DIAMETERS AND 2½" X 2½" X ¼" FOR 78"ø AND LARGER. THE ANGLES SHALL BE ATTACHED BY ⅜"ø GALVANIZED NUTS AND BOLTS.
   PIPE ARCHES EQUAL TO OR LARGER THAN 77" X 52" (2⅔ X ½), 73" X 55" (3 X 1 OR 5 X 1) SHALL HAVE REINFORCEMENT PLACED UNDER THE CENTER PANEL SEAMS.
3. A TOE PLATE EXTENSION SHALL BE SUPPLIED WHEN SPECIFIED IN DRAINAGE STRUCTURE TABLE. THE TOE PLATE EXTENSION SHALL BE THE SAME BASE METAL AS THE END SECTION AND SHALL BE FASTENED TO THE END SECTION WITH ⅜"ø BOLTS. A CUT-OFF WALL SHALL BE POURED IF INDICATED IN THE CONTRACT DOCUMENTS. PAYMENT WILL BE MADE UNDER APPROPRIATE CONTRACT ITEMS. REFER TO STANDARD SHEET "CUT-OFF WALLS FOR END SECTIONS".
4. FOR PIPES AND PIPE ARCHES WITH 3 PIECE BODIES. THE WIDTH OF THE CENTER PANEL SHALL BE GREATER THAN 20% OF THE PIPE PERIPHERY. MULTIPLE PANEL BODIES SHALL HAVE LAP SEAMS WHICH SHALL BE TIGHTLY JOINED BY ⅜"ø GALVANIZED RIVETS OR BOLTS.
5. THE CONTRACTOR SHALL HAVE THE OPTION OF SUPPLYING EITHER A THREADED ROD CONNECTION OR METAL STRAP CONNECTION.
6. THE CONTRACTOR SHALL HAVE THE OPTION OF SUPPLYING EITHER A THREADED ROD CONNECTION OR A METAL STRAP CONNECTION FOR 17" X 13" THRU 28" X 20" PIPE ARCHES (2⅔ X ½) ONLY.

EFFECTIVE DATE: 01/08/09

STATE OF NEW YORK
DEPARTMENT OF TRANSPORTATION

U.S. CUSTOMARY STANDARD SHEET

ALUMINUM AND STEEL END SECTIONS FOR CORRUGATED PIPE AND PIPE ARCH

APPROVED OCTOBER 01, 2008
/S/ ROBERT L. SACK, P.E.
DEPUTY CHIEF ENGINEER (TECHNICAL SERVICES)

ISSUED UNDER EB 08-036

603-02

FILE NAME = IP_PWP:d0109553\603-02.dgn
DATE/TIME = 06-NOV-2008 15:00
USER = jturley

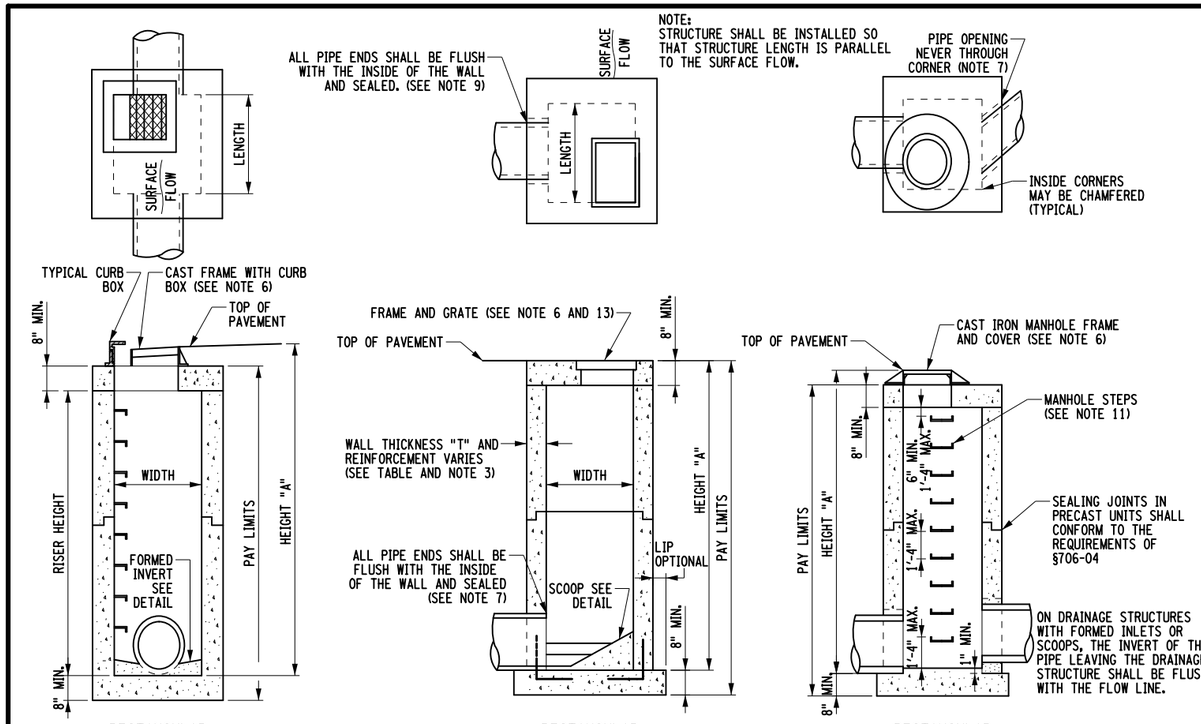

RECTANGULAR DRAINAGE STRUCTURE TYPE A THROUGH P
SHOWN WITH CURB BOX, FORMED INVERT, AND A MONOLITHICALLY CAST FLOOR SLAB

RECTANGULAR DRAINAGE STRUCTURE TYPE A THROUGH P
SHOWN WITH WELDED FRAME, SCOOP AND INTEGRAL FLOOR SLAB.

RECTANGULAR DRAINAGE STRUCTURE TYPE A THROUGH P
SHOWN WITH MANHOLE FRAME AND COVER AND WITH SEPARATE FLOOR SLAB

GENERAL NOTES:

1. DRAINAGE STRUCTURES SHALL BE CAST IN PLACE OR PRECAST UNITS. ROUND DRAINAGE STRUCTURES SHALL BE PRECAST ONLY. ALL CAST IN PLACE CONCRETE SHALL BE CLASS A. THE CONTRACTORS SHALL SUBMIT WORKING DRAWINGS FOR REVIEW AND APPROVAL OF ANY CHANGES TO THE STRUCTURES SHOWN ON THE STANDARD SHEETS OR CONTACT PLANS, OTHER THAN MINOR CHANGES APPROVED BY THE ENGINEER. USE OF FLAT SLAB TOPS ON ROUND PRECAST UNITS SHALL REQUIRE SUBMISSION OF WORKING DRAWINGS.

2. SEE PLANS FOR ELEVATIONS, DRAINAGE STRUCTURE LOCATIONS, TYPE OF GRATE UTILIZED, LOCATION OF SCOOPS, FORMED INVERTS, SUMPS AND DRAINS.

3. REINFORCEMENT FOR RECTANGULAR DRAINAGE UNITS (CAST IN PLACE OR PRECAST) BAR REINFORCEMENT INDICATED FOR RECTANGULAR TOP SLABS, RISERS AND BASES SHALL BE GRADE 60. WIRE FABRIC FOR CONCRETE REINFORCEMENT SHALL MEET THE REQUIREMENTS OF §709-02. RISER REINFORCEMENT SHALL BE PLACED SO IT WILL HAVE A MINIMUM COVER OF 2" BUT NO MORE THAN 4" FROM THE INSIDE FACE. THE REINFORCEMENT SHALL EXTEND COMPLETELY AROUND THE DRAINAGE STRUCTURE RISER AND SHALL BE LAPPED AND TIED. BASE REINFORCEMENT SHALL BE PLACED ABOVE THE MIDPOINT OF SLAB AND SHALL HAVE A MINIMUM CONCRETE COVER OF 2".

4. ROUND ALTERNATIVE:
WHEN SPECIFIED BY PAYMENT ITEM, THE CONTRACTOR MAY SUBSTITUTE ROUND, PRECAST DRAINAGE STRUCTURES IN PLACE OF RECTANGULAR STRUCTURES USING SIZES INDICATED IN THE "SELECTION TABLE FOR ALTERNATE ROUND DRAINAGE STRUCTURES" ON SHEET 4 OF 4. THE RISER, TOP SLAB, AND BOTTOM SLAB FOR THE ROUND ALTERNATE SHALL BE MANUFACTURED IN ACCORDANCE WITH THE PROVISIONS OF §706-04 OF THE STANDARD SPECIFICATIONS. WORKING DRAWINGS FOR THE ROUND ALTERNATES SHALL BE SUBMITTED TO THE ENGINEER FOR REVIEW AND APPROVAL, UNLESS THE ROUND ALTERNATE PROPOSED HAS BEEN PREVIOUSLY APPROVED. FOR PREVIOUSLY APPROVED ROUND UNITS THE CONTRACTOR SHALL SUBMIT A COPY OF THE APPROVED DRAWINGS TO THE ENGINEER.

5. FORMED INVERTS:
FORMED INVERTS, SCOOP AND SUMPS SHALL BE PROVIDED AND INCLUDED IN THE PRICES BID FOR DRAINAGE STRUCTURES CALLED FOR IN THE CONTRACT DOCUMENTS. WHEN NON-CIRCULAR PIPES ARE USED, THE FORMED INVERT AND SUMP DETAILS SHALL BE MODIFIED TO FIT THE INVERTS.

6. GRATES:
CAST FRAMES MAY HAVE EITHER RETICULINE OR PARALLEL BAR GRATES, AND WELDED FRAMES MAY HAVE EITHER RETICULINE OR RECTANGULAR GRATES. IF NO GRATE IS SPECIFIED IN THE CONTRACT DOCUMENTS, THE CONTRACTOR MAY FURNISH EITHER TYPE. GRATES SHALL BE INSTALLED SO THAT THE LENGTH OF THE GRATE IS PARALLEL TO THE SURFACE FLOW.

7. WALL OPENINGS:
RECTANGULAR DRAINAGE STRUCTURES SHOWN ON THESE STANDARD SHEETS SHOULD NEVER HAVE CORNER PIPE ENTRIES. IF PIPE ALIGNMENT WOULD REQUIRE A CORNER ENTRY, USE A ROUND DRAINAGE STRUCTURE OR USE A SPECIAL DRAINAGE STRUCTURE. ALL WALL OPENINGS SHALL BE FORMED COMPLETELY THROUGH THE WALL SECTION. CIRCULAR WALL OPENINGS SHALL BE FORMED FOR EACH CIRCULAR PIPE ENTERING PERPENDICULAR TO THE WALL. WHEN NON-CIRCULAR PIPES ARE SPECIFIED, OR ROUND PIPE ENTRIES ARE SKEWED, RECTANGULAR OPENINGS MAY BE USED. THE CLEARANCE BETWEEN THE OUTSIDE OF THE PIPE AND THE OPENING SHALL BE AT LEAST 2" BUT NO MORE THAN 3". THIS CLEARANCE SHALL BE MEASURED BETWEEN THE OUTSIDE OF THE PIPE AND NEAREST POINT ON THE RECTANGULAR OPENING. IF A CORNER HAS PIPE ENTRIES ON BOTH SIDES, AND THERE IS LESS THAN 2" BETWEEN EITHER OPENING AND THE CORNER. THEN THAT SECTION OF THE DRAINAGE STRUCTURE MUST HAVE 8" THICK WALLS.

8. MONOLITHIC AND INTEGRAL BASES MAY HAVE A MAXIMUM VERTICAL DRAFT OF ½" ON ALL INTERIOR DIMENSIONS, TO FACILITATE FORM REMOVAL. FOR WALL OPENINGS THAT EXTEND THE FULL WIDTH OR LENGTH OF THE STRUCTURE, THE MINIMUM CLEARANCE BETWEEN THE OUTSIDE OF THE PIPE AND THE WALL OPENING SHALL BE 1½".

9. FINISHING PIPE ENTRIES:
THE BELLS OF CONCRETE PIPE SHALL BE CUT OFF AT EVERY PIPE ENTRY WHERE THE BELL ENTERS A STRUCTURE. CONNECTIONS BETWEEN THE STRUCTURE AND PIPE SHALL BE MADE BY EITHER USING A RESILIENT CONNECTOR MEETING THE REQUIREMENTS OF ASTM C1478 OR BY COMPLETELY FILLING THE SPACE AROUND EACH PIPE WITH CONCRETE GROUTING MATERIAL OR CONCRETE REPAIR MATERIAL. IN CASE OF LARGE SPACES AROUND PIPES, CONCRETE PAVERS, COMPLETELY BEDDED IN GROUT OR CONCRETE REPAIR MATERIAL, MAY BE USED.

10. TOP SLAB AND OR FRAME AND GRATE ADJUSTMENT
A MINIMUM OF ½" OF BEDDING SHALL BE PLACED BETWEEN RISERS AND PRECAST TOP SLABS. GRADE ADJUSTMENT FOR TOP SLABS AND/OR FRAMES AND GRATES OF UP TO 2½" SHALL BE MADE WITH BEDDING MATERIAL MEETING THE REQUIREMENTS OF CONCRETE GROUTING MATERIALS OR CONCRETE REPAIR MATERIAL. GRADE ADJUSTMENT FOR TOP SLABS AND/OR FRAMES AND GRATES OF UP TO 6" SHALL BE MADE WITH A COMBINATION OF PRECAST CONCRETE PAVERS AND BEDDING MATERIALS. GRADE ADJUSTMENT FOR TOP SLABS AND/OR FRAMES AND GRATES OF UP TO 1'-0" SHALL BE MADE WITH CAST-IN-PLACE CONCRETE OR A COMBINATION OF PRECAST CONCRETE ADJUSTMENT ELEMENTS AND BEDDING MATERIALS. ALTERNATELY, GRADE ADJUSTMENTS FOR FRAMES AND GRATES OF UP TO 2" MAY BE MADE WITH RECYCLED RUBBER ELEMENTS OR UP TO 3" WITH HDPE ELEMENTS. RECYCLED RUBBER AND HDPE ELEMENTS SHALL BE PRODUCTS APPROVED BY THE MATERIALS BUREAU AND SHALL BE INSTALLED PER MANUFACTURER'S INSTRUCTIONS.

11. STEPS:
MANHOLE STEPS SHALL BE REQUIRED IN ALL DRAINAGE STRUCTURES DEEPER THAN 4'-0".

12. CORBELED OR CONICAL RISER SECTIONS AND FLAT SLAB REDUCERS:
ROUND PRECAST DRAINAGE STRUCTURES OR MANHOLES (WHEN ALLOWED OR SPECIFIED) MAY BE FITTED WITH CONCENTRIC OR ECCENTRIC CONICAL SECTIONS TO REDUCE THEIR DIAMETERS, PROVIDED THE USE OF SUCH DEVICES IS COMPATIBLE WITH THE DRAINAGE SYSTEM DESIGN. THE CONTRACTOR SHALL SUBMIT WORKING DRAWINGS FOR REVIEW AND APPROVAL OF FLAT SLAB REDUCERS FOR ROUND OR RECTANGULAR STRUCTURES. A WALL SECTION WITH A HEIGHT LESS THAN 6" BETWEEN THE TOP OF THE HIGHEST PIPE ENTRY AND THE BOTTOM OF A CONICAL SECTION OR FLAT SLAB REDUCER SHALL NOT BE PERMITTED.

13. WHEN PIPE LOCATIONS PROVIDE FOR LESS THAN 8" BETWEEN THE TOP OF THE UPPERMOST PIPE AND THE TOP OF THE RISER AND THE STRUCTURE MAY BE SUBJECTED TO HIGHWAY LOADS, CONTACT STRUCTURES DIVISION FOR A SPECIAL DESIGN.

14. WHEN SITE CONDITIONS REQUIRE A DRAINAGE STRUCTURE TO BE INSTALLED TO A DEPTH GREATER THAN THAT SHOWN IN THE CONTRACT DOCUMENTS, AN INSTALLATION TOLERANCE OF 8" IS PERMITTED WITHOUT REQUIRING AN INCREASE IN WALL THICKNESS OR REINFORCING STEEL AS REQUIRED BY THE DRAINAGE STRUCTURE REINFORCEMENT TABLE.

15. THE PAY ITEMS FOR DRAINAGE STRUCTURES SPECIFY THE STRUCTURE AND FRAME. DRAINAGE STRUCTURE ITEM NUMBERS:
RECTANGULAR DRAINAGE STRUCTURE ITEM 604.30XXYY
RECTANGULAR DRAINAGE STRUCTURE WITH ROUND OPTION ITEM 604.31XXYY
RECTANGULAR DRAINAGE STRUCTURE WITH CONCRETE CAP ITEM 604.32XXYY
SEE TABLES BELOW FOR XX AND YY CODES.
EXAMPLE: 604.300706 - RECTANGULAR STRUCTURE TYPE G WITH TYPE 6 WELDED FRAME (SEE SHEET 4 OF 4 FOR ITEM NUMBERS FOR STRUCTURE TYPE Q, R, S, T, AND U)

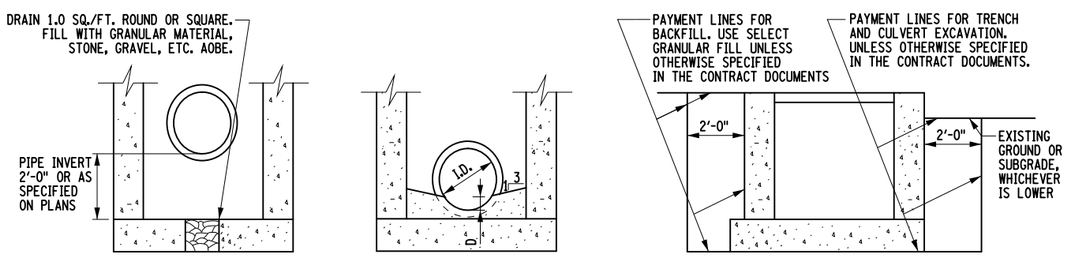

DRAINAGE STRUCTURE WITH SUMP AND DRAIN

FORMED INVERT DETAIL
(SEE NOTE 5)

EXCAVATION AND BACKFILL LIMITS AND MATERIALS

DRAINAGE STRUCTURE REINFORCEMENT		
HEIGHT "A"	WALL THICKNESS	RISER REINFORCEMENT (SEE NOTE 3 AND 15)
UP TO 7'-0"	6"	6"X6"- W6 X W6 OR *3 BARS AT 10" BOTH HORIZ. AND VERT.
	8"	UNREINFORCED
7'-0" TO 14'-0"	8"	6"X6"- W8.5 X W8.5 OR *3 BARS AT 8" BOTH HORIZ. AND VERT.
14'-0" TO 21'-0"	8"	4"X4"- W8.5 X W8.5 OR *3 BARS AT 5" BOTH HORIZ. AND VERT.
		FLOOR SLAB REINFORCEMENT (SEE NOTE 3)
UP TO 7'-0"		6"X6"- W11 X W11 OR *3 BARS AT 6" IN BOTH DIRECTIONS
7'-0" TO 14'-0"		4"X4"- W11 X W11 OR *3 BARS AT 4" IN BOTH DIRECTIONS
14'-0" TO 21'-0"		4"X4"- W14 X W14 OR *3 BARS AT 3" IN BOTH DIRECTIONS

*T MAY BE 6" OR 8" FOR THE FIRST 7'-0". EXCEPTIONS ARE SIZE S, T, AND U WITH CURB, RECTANGULAR STRUCTURES WITH ROUND MANHOLE OPENING, OR IF THERE IS LESS THAN 2" ON EITHER SIDE OF A CORNER. (NOTE 7) WHICH MUST HAVE 8" THICK WALLS.

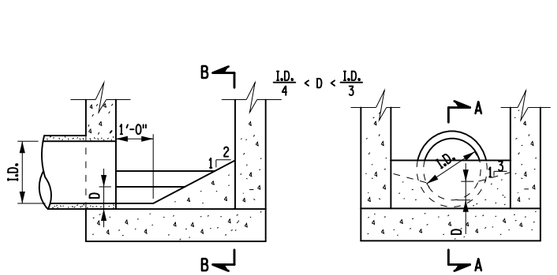

SECTION A-A

SECTION B-B

SCOOP DETAILS

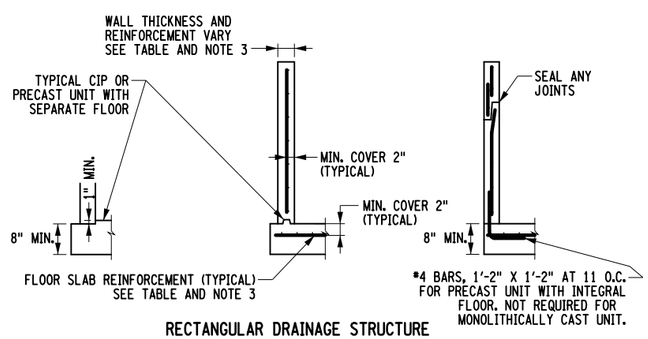

RECTANGULAR DRAINAGE STRUCTURE REINFORCING DETAILS

STRUCTURE SIZES AND PAY CODES			
STRUCTURE TYPE	INSIDE DIMENSIONS WIDTH	INSIDE DIMENSIONS LENGTH	PAY ITEM XX CODE
A	3'-0"	3'-0"	01
B	4'-0"	3'-0"	02
C	5'-0"	3'-0"	03
D	6'-8"	3'-0"	04
E	3'-0"	4'-0"	05
F	4'-0"	4'-0"	06
G	5'-0"	4'-0"	07
H	6'-8"	4'-0"	08
I	3'-0"	5'-0"	09
J	4'-0"	5'-0"	10
K	5'-0"	5'-0"	11
L	6'-8"	5'-0"	12
M	3'-0"	6'-8"	13
N	4'-0"	6'-8"	14
O	5'-0"	6'-8"	15
P	6'-8"	6'-8"	16

FRAMES AND PAY CODES	
FRAME TYPE	PAY ITEM YY CODE
WELDED 3	03
WELDED 6	06
WELDED 11	11
WELDED 16	16
WELDED 22	22
MANHOLE 2'-8"	32
CAST F1	71
CAST F2	72
CAST F3	73
PARALLEL BAR 10PCB	90
PARALLEL BAR 11PCB	91
PARALLEL BAR 12PCB	92

STATE OF NEW YORK
DEPARTMENT OF TRANSPORTATION

U.S. CUSTOMARY STANDARD SHEET

DRAINAGE STRUCTURE DETAILS
(SHEET 1 OF 4)

APPROVED: NOVEMBER 28, 2012
/S/ RICHARD W. LEE, P.E.
DEPUTY CHIEF ENGINEER (DESIGN)

ISSUED UNDER EB 12-044

604-02

EFFECTIVE DATE: 05/02/13

FILE NAME = 604-0201_050213.dgn
DATE/TIME = 25-AUG-2014 11:01
USER = jturley

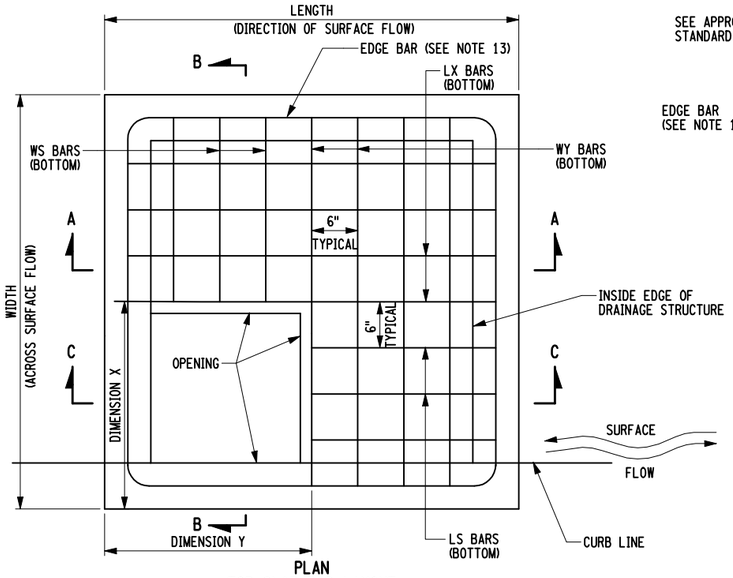

PLAN
TOP SLAB BAR LAYOUT
FOR WELDED, PARALLEL BAR
AND CAST FRAMES

SEE SHEET 3 OF 4 FOR BAR LIST AND TOP SLAB DIMENSIONS

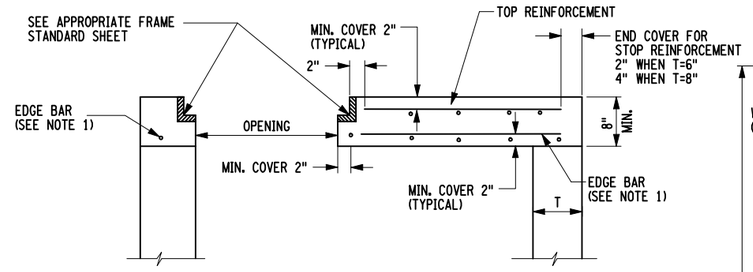

SECTION B-B
TYPICAL FOR ALL TYPES OF FRAMES

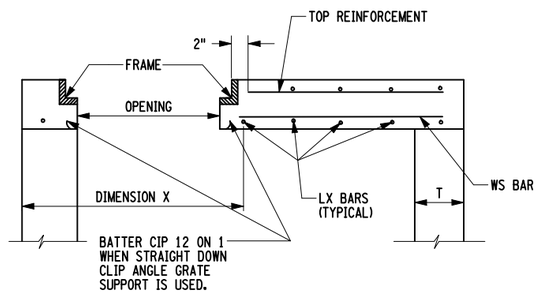

SECTION B-B
WELDED FRAME

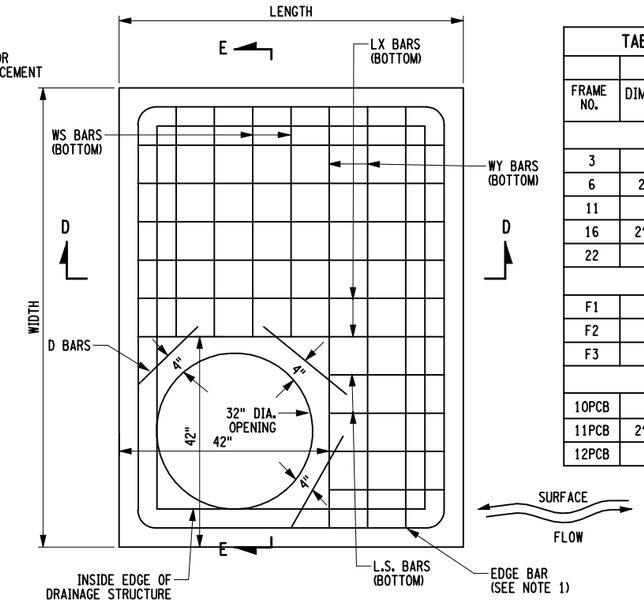

PLAN
TOP SLAB BAR LAYOUT
FOR ROUND MANHOLE COVER

SEE SHEET 3 OF 4 FOR BAR LIST AND TOP SLAB DIMENSIONS.

TABLE OF "X" AND "Y" DIMENSIONS				
	6" THICK WALLS		8" THICK WALLS	
FRAME NO.	DIMENSION X	DIMENSION Y	DIMENSION X	DIMENSION Y
WELDED FRAMES				
3	2'-3"	3'-4½"	2'-5"	3'-6½"
6	2'-5½"	2'-6½"	2'-7½"	2'-8½"
11	2'-8"	3'-4½"	2'-10"	3'-6½"
16	2'-10½"	4'-2½"	3'-0½"	4'-4½"
22	3'-6"	3'-9½"	3'-8"	3'-11½"
CAST IRON FRAMES				
F1	3'-5"	3'-0"	3'-7"	3'-2"
F2	3'-5"	3'-10"	3'-7"	4'-0"
F3	3'-5"	4'-8"	3'-7"	4'-10"
PARALLEL BAR FRAMES				
10PCB	2'-8"	3'-4½"	2'-10"	3'-6½"
11PCB	2'-10½"	4'-2½"	3'-0½"	4'-4½"
12PCB	3'-6"	3'-9½"	3'-8"	3'-11½"

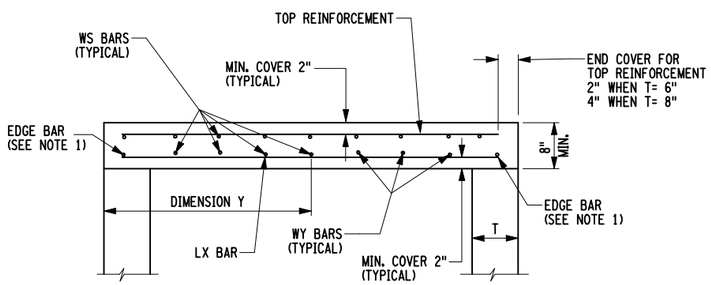

SECTION A-A
TYPICAL FOR ALL TYPES OF FRAME

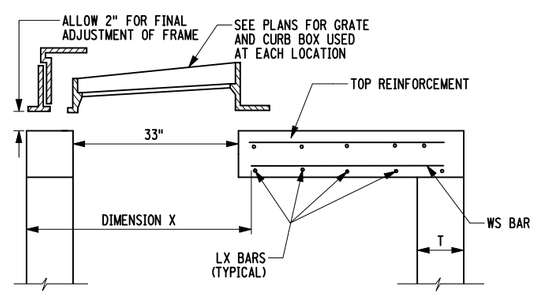

SECTION B-B
CAST FRAME

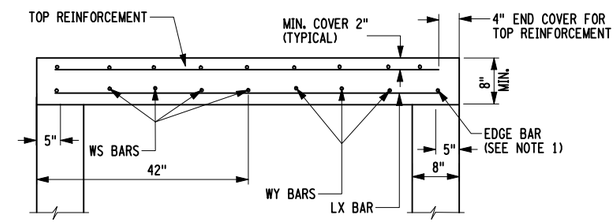

SECTION D-D

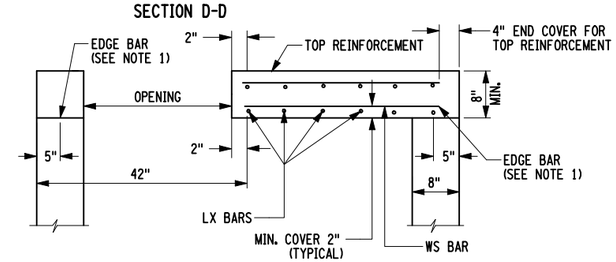

SECTION E-E

OUTSIDE FRAME DIMENSIONS		
FRAME NO.	WIDTH	LENGTH
3	1'-11 15/16"	3'-1½"
6	2'-2 7/16"	2'-3½"
11	2'-4 15/16"	3'-1½"
16	2'-7 7/16"	3'-11½"
22	3'-2 15/16"	3'-6½"
10PCB	2'-0⅞"	3'-2½"
11PCB	2'-3⅜"	4'-0½"
12PCB	2'-10⅞"	3'-7½"
F1	3'-3¼" MIN.	2'-11" MIN.
F2	3'-3¼" MIN.	3'-9¼" MIN.
F3	3'-3¼" MIN.	4'-7¼" MIN.

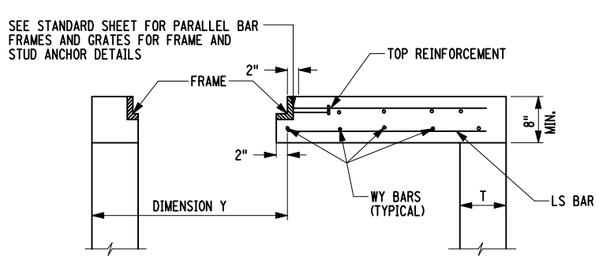

SECTION C-C
PARALLEL BAR FRAME

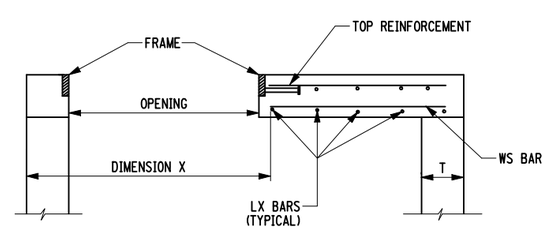

SECTION B-B
PARALLEL BAR FRAME

NOTES:

1. THE E BARS (EDGE BARS) ARE PLACED 3" FROM THE OUTSIDE EDGE FOR TOP SLABS ON 6" WALLS, AND 5" FROM THE OUTSIDE EDGE FOR 8" WALLS.
2. THE LX BARS ARE LOCATED USING THE X DIMENSION AND THE WY ARE LOCATED USING THE Y DIMENSIONS. ALL W AND L BARS SHALL BE EVENLY SPACED AT APPROXIMATELY 6" SO THAT THE DISTANCE BETWEEN THE LAST W OR L BAR AND THE ADJACENT EDGE BAR SHALL NOT EXCEED 10".
3. TOP SLABS FOR TYPE A, B, C, D, E, F, G, I, J, K AND M DRAINAGE STRUCTURES ARE REINFORCED WITH #6 BARS ON THE BOTTOM, AND 6X6, W4 X W4 FABRIC ON THE TOP.
4. TOP SLABS FOR TYPE H, L, N, O, AND P DRAINAGE STRUCTURES ARE REINFORCED WITH #7 BARS AND 6X6, W5 X W5 FABRIC. THE CONTRACTOR HAS THE OPTION OF USING #6 BARS AND A BAR SPACING OF 5" WHEN THIS OPTION IS USED. THE MAXIMUM DISTANCE BETWEEN THE LAST W OR L BAR AND THE EDGE BAR SHALL NOT EXCEED 8¾".

EFFECTIVE DATE: 01/08/09

STATE OF NEW YORK
DEPARTMENT OF TRANSPORTATION

U.S. CUSTOMARY STANDARD SHEET

DRAINAGE STRUCTURE DETAILS
(SHEET 2 OF 4)

APPROVED SEPTEMBER 19, 2008
/S/ DANIEL D'ANGELO, P.E.
DEPUTY CHIEF ENGINEER
(DESIGN)

ISSUED UNDER EB 08-036

604-02

FILE NAME = IP_PWP:d0109553\604-0202.dgn
DATE/TIME = 06-NOV-2008 15:01
USER = jturley

BOTTOM REINFORCEMENT

TOP SLAB WITH WELDED FRAME

STR. TYPE	FRAME NO.	NO. OF BARS	DESIG-NATION	NO. OF BARS	DESIG-NATION	NO. OF BARS	DESIG-NATION	NO. OF BARS	DESIG-NATION	NO. OF BARS	DESIG-NATION	NO. OF BARS	DESIG-NATION
A	3			3	6LX1	5	6WS2	1	6WY1	4	6E1		
B	3			5	6LX1	5	6WS11	1	6WY3	2	6E3	2	6E1
B	11			4	6LX1	5	6WS7	1	6WY3	2	6E3	2	6E1
C	3			7	6LX1	5	6WS19	1	6WY5	2	6E5	2	6E1
C	11			6	6LX1	5	6WS15	1	6WY5	2	6E5	2	6E1
D	3			10	6LX1	5	6WS27	1	6WY7	2	6E7	2	6E1
D	11			9	6LX1	5	6WS23	1	6WY7	2	6E7	2	6E1
E	3	3	6LS4	3	6LX3	5	6WS2	3	6WY1	2	6E1	2	6E3
F	3	3	6LS4	5	6LX3	5	6WS11	3	6WY3	4	6E3		
F	6	3	6LS12	4	6LX3	3	6WS9	4	6WY3	4	6E3		
F	11	3	6LS4	4	6LX3	5	6WS7	3	6WY3	4	6E3		
G	3	3	6LS4	7	6LX3	5	6WS19	3	6WY5	2	6E5	2	6E3
G	6	3	6LS2	6	6LX3	3	6WS17	4	6WY5	2	6E5	2	6E3
G	11	3	6LS4	6	6LX3	5	6WS15	3	6WY5	2	6E5	2	6E3
H	3	3	7LS4	10	7LX3	5	7WS27	3	7WY7	2	7E7	2	7E3
H	6	3	7LS12	10	7LX3	3	7WS25	4	7WY7	2	7E7	2	7E3
H	11	3	7LS4	9	7LX3	5	7WS23	3	7WY7	2	7E7	2	7E3
I	3	3	6LS14	3	6LX5	5	6WS2	5	6WY1	2	6E1	2	6E5
J	3	3	6LS14	5	6LX5	5	6WS11	5	6WY3	2	6E3	2	6E5
J	6	3	6LS19	4	6LX5	3	6WS9	6	6WY3	2	6E3	2	6E5
J	11	3	6LS14	4	6LX5	5	6WS7	5	6WY3	2	6E3	2	6E5
J	16	4	6LS5	4	6LX5	7	6WS5	3	6WY3	2	6E3	2	6E5
K	3	3	6LS14	7	6LX5	5	6WS19	5	6WY5	4	6E5		
K	6	3	6LS19	6	6LX5	3	6WS17	6	6WY5	4	6E5		
K	11	3	6LS14	6	6LX5	5	6WS15	5	6WY5	4	6E5		
K	16	4	6LS5	6	6LX5	7	6WS13	3	6WY5	4	6E5		
K	22	5	6LS9	4	6LX5	6	6WS8	4	6WY5	4	6E5		
L	3	3	7LS14	10	7LX5	5	7WS27	5	7WY7	2	7E7	2	7E5
L	6	3	7LS19	10	7LX5	3	7WS25	6	7WY7	2	7E7	2	7E5
L	11	3	7LS14	9	7LX5	5	7WS23	5	7WY7	2	7E7	2	7E5
L	16	4	7LS5	9	7LX5	7	7WS21	3	7WY7	2	7E7	2	7E5
L	22	5	7LS9	8	7LX5	6	7WS19	4	7WY7	2	7E7	2	7E5
M	3	3	6LS25	3	6LX7	5	6WS2	8	6WY1	2	6E1	2	6E7
N	3	3	7LS25	5	7LX7	5	7WS8	8	7WY3	2	7E3	2	7E7
N	6	3	7LS30	4	7LX7	3	7WS6	10	7WY3	2	7E3	2	7E7
N	11	3	7LS25	3	7LX7	5	7WS4	8	7WY3	2	7E3	2	7E7
N	16	4	7LS19	4	7LX7	7	7WS3	6	7WY3	2	7E3	2	7E7
O	3	3	7LS25	7	7LX7	5	7WS16	8	7WY5	2	7E5	2	7E7
O	6	3	7LS30	7	7LX7	3	7WS14	10	7WY5	2	7E5	2	7E7
O	11	3	7LS25	6	7LX7	5	7WS12	8	7WY5	2	7E5	2	7E7
O	16	4	7LS19	6	7LX7	7	7WS10	6	7WY5	2	7E5	2	7E7
O	22	5	7LS22	4	7LX7	6	7WS5	7	7WY5	2	7E5	2	7E7
P	3	3	7LS25	10	7LX7	5	7WS27	8	7WY7	4	7E7		
P	6	3	7LS30	10	7LX7	3	7WS25	10	7WY7	4	7E7		
P	11	3	7LS25	9	7LX7	5	7WS23	8	7WY7	4	7E7		
P	16	4	7LS19	9	7LX7	7	7WS21	6	7WY7	4	7E7		
P	22	5	7LS22	8	7LX7	6	7WS19	7	7WY7	4	7E7		

BOTTOM REINFORCEMENT

TOP SLAB WITH PARALLEL BAR FRAME

STR. TYPE	FRAME NO.	NO. OF BARS	DESIG-NATION	NO. OF BARS	DESIG-NATION	NO. OF BARS	DESIG-NATION	NO. OF BARS	DESIG-NATION	NO. OF BARS	DESIG-NATION	NO. OF BARS	DESIG-NATION
F	11PCB			4	6LX3	7	6WS5	1	6WY3	4	6E3		
G	11PCB			6	6LX3	7	6WS13	1	6WY5	2	6E5	2	6E3
H	11PCB			9	7LX3	7	7WS21	1	7WY7	2	7E7	2	7E3
I	12PCB	6	6LS9	1	6LX5			4	6WY1	2	6E1	2	6E5
J	10PCB	4	6LS14	4	6LX5	5	6WS7	5	6WY3	2	6E3	2	6E5
K	10PCB	4	6LS14	6	6LX5	5	6WS15	5	6WY5	4	6E5		
K	12PCB	6	6LS9	5	6LX5	6	6WS8	4	6WY5	4	6E5		
L	10PCB	4	7LS14	10	7LX5	5	7WS23	5	7WY7	2	7E7	2	7E5
L	12PCB	6	7LS9	8	7LX5	6	7WS19	4	7WY7	2	7E7	2	7E5
M	12PCB	6	7LS22	1	7LX7			7	6WY1	2	6E1	2	7E7
N	10PCB	4	7LS25	4	7LX7	5	7WS4	8	7WY3	2	7E3	2	7E7
N	11PCB	4	7LS19	4	7LX7	7	7WS3	6	7WY3	2	7E3	2	7E7
O	10PCB	4	7LS25	6	7LX7	5	7WS12	8	7WY5	2	7E5	2	7E7
O	11PCB	4	7LS19	6	7LX7	7	7WS10	6	7WY5	2	7E5	2	7E7
O	12PCB	6	7LS22	5	7LX7	6	7WS5	7	7WY5	2	7E5	2	7E7
P	10PCB	4	7LS25	10	7LX7	5	7WS23	8	7WY7	4	7E7		
P	11PCB	5	7LS19	9	7LX7	7	7WS21	6	7WY7	4	7E7		
P	12PCB	4	7LS22	8	7LX7	6	7WS19	7	7WY7	4	7E7		

BOTTOM REINFORCEMENT

TOP SLAB WITH CAST FRAME

STR. TYPE	FRAME NO.	NO. OF BARS	DESIG-NATION	NO. OF BARS	DESIG-NATION	NO. OF BARS	DESIG-NATION	NO. OF BARS	DESIG-NATION	NO. OF BARS	DESIG-NATION	NO. OF BARS	DESIG-NATION
F	F1	5	6LS7	3	6LX3	4	6WS2	4	6WY3	4	6E3		
F	F3			3	6LX3	8	6WS2			4	6E3		
G	F1	5	6LS7	5	6LX3	4	6WS9	4	6WY5	2	6E5	2	6E3
G	F3			5	6LX3	8	6WS9			2	6E5	2	6E3
H	F1	5	7LS7	8	7LX3	4	7WS19	4	7WY7	2	7E7	2	7E3
J	F1	5	6LS16	3	6LX5	4	6WS1	5	6WY3	2	6E3	2	6E5
J	F2	5	6LS8	3	6LX5	6	6WS1	4	6WY3	2	6E3	2	6E5
K	F1	5	6LS16	5	6LX5	4	6WS9	5	6WY5	4	6E5		
K	F2	5	6LS8	5	6LX5	6	6WS9	4	6WY5	4	6E5		
L	F1	5	7LS16	8	7LX5	4	7WS19	5	7WY7	2	7E7	2	7E5
L	F2	5	7LS8	8	7LX5	6	7WS19	4	7WY7	2	7E7	2	7E5
N	F1	5	7LS27	3	7LX7	4	7WS2	9	7WY3	2	7E3	2	7E7
N	F2	5	7LS21	3	7LX7	6	7WS2	7	7WY3	2	7E3	2	7E7
N	F3	5	7LS16	3	7LX7	8	7WS2	6	7WY3	2	7E3	2	7E7
O	F1	5	7LS27	5	7LX7	4	7WS6	9	7WY5	2	7E5	2	7E7
O	F2	5	7LS21	5	7LX7	6	7WS6	7	7WY5	2	7E5	2	7E7
O	F3	5	7LS16	5	7LX7	8	7WS6	6	7WY5	2	7E5	2	7E7
P	F1	5	7LS27	8	7LX7	4	7WS19	9	7WY7	4	7E7		
P	F2	5	7LS21	8	7LX7	6	7WS19	7	7WY7	4	7E7		
P	F3	5	7LS16	8	7LX7	8	7WS19	6	7WY7	4	7E7		

BAR LIST

DESIGNATION	LENGTH	SIZE	DESCRIPTION	DESIGNATION	LENGTH	SIZE	DESCRIPTION
6LS4	1'-6"	#6	SHORT L BAR	7LS4	1'-6"	#7	SHORT L BAR
6LS5	1'-7"	#6	SHORT L BAR	7LS5	1'-7"	#7	SHORT L BAR
6LS7	1'-9"	#6	SHORT L BAR	7LS7	1'-9"	#7	SHORT L BAR
6LS8	1'-11"	#6	SHORT L BAR	7LS8	1'-11"	#7	SHORT L BAR
6LS9	2'-0"	#6	SHORT L BAR	7LS9	2'-0"	#7	SHORT L BAR
6LS12	2'-3"	#6	SHORT L BAR	7LS12	2'-3"	#7	SHORT L BAR
6LS14	2'-5"	#6	SHORT L BAR	7LS14	2'-5"	#7	SHORT L BAR
6LS16	2'-9"	#6	SHORT L BAR	7LS16	2'-9"	#7	SHORT L BAR
6LS19	3'-3"	#6	SHORT L BAR	7LS19	3'-3"	#7	SHORT L BAR
6LS25	4'-0"	#6	SHORT L BAR	7LS21	3'-7"	#7	SHORT L BAR
6LX1	3'-6"	#6	LONG L BAR	7LS22	3'-8"	#7	SHORT L BAR
6LX3	4'-6"	#6	LONG L BAR	7LS25	4'-1"	#7	SHORT L BAR
6LX5	5'-6"	#6	LONG L BAR	7LS27	4'-5"	#7	SHORT L BAR
6LX7	7'-2"	#6	LONG L BAR	7LS30	4'-11"	#7	SHORT L BAR
6WS1	1'-4"	#6	SHORT W BAR	7LX3	4'-6"	#7	LONG L BAR
6WS2	1'-6"	#6	SHORT W BAR	7LX5	6'-5"	#7	LONG L BAR
6WS5	1'-11"	#6	SHORT W BAR	7LX7	7'-2"	#7	LONG L BAR
6WS7	2'-2"	#6	SHORT W BAR	7WS2	1'-5"	#7	SHORT W BAR
6WS8	2'-3"	#6	SHORT W BAR	7WS3	1'-11"	#7	SHORT W BAR
6WS9	2'-4"	#6	SHORT W BAR	7WS4	2'-1"	#7	SHORT W BAR
6WS10	2'-5"	#6	SHORT W BAR	7WS5	2'-3"	#7	SHORT W BAR
6WS11	2'-7"	#6	SHORT W BAR	7WS6	2'-4"	#7	SHORT W BAR
6WS13	2'-11"	#6	SHORT W BAR	7WS7	2'-5"	#7	SHORT W BAR
6WS15	3'-2"	#6	SHORT W BAR	7WS8	2'-7"	#7	SHORT W BAR
6WS17	3'-4"	#6	SHORT W BAR	7WS10	2'-11"	#7	SHORT W BAR
6WS19	3'-7"	#6	SHORT W BAR	7WS12	3'-2"	#7	SHORT W BAR
6WS21	4'-1"	#6	SHORT W BAR	7WS14	3'-4"	#7	SHORT W BAR
6WS23	4'-10"	#6	SHORT W BAR	7WS16	3'-6"	#7	SHORT W BAR
6WS27	5'-3"	#6	SHORT W BAR	7WS19	4'-0"	#7	SHORT W BAR
6WY1	3'-6"	#6	LONG W BAR	7WS20	4'-1"	#7	SHORT W BAR
6WY3	4'-6"	#6	LONG W BAR	7WS21	4'-7"	#7	SHORT W BAR
6WY5	5'-6"	#6	LONG W BAR	7WS23	4'-10"	#7	SHORT W BAR
6WY7	7'-2"	#6	LONG W BAR	7WS25	5'-0"	#7	SHORT W BAR
6D1	1'-6"	#6	DIAGONAL BAR	7WS27	5'-3"	#7	SHORT W BAR
6E1	3'-3 3/8"	#6	EDGE BAR	7WY3	4'-6"	#7	LONG W BAR
6E3	4'-3 3/8"	#6	EDGE BAR	7WY5	5'-6"	#7	LONG W BAR
6E5	5'-3 3/8"	#6	EDGE BAR	7WY7	7'-2"	#7	LONG W BAR
6E7	6'-4 3/8"	#6	EDGE BAR	7E3	4'-3"	#7	EDGE BAR
				7E5	5'-3"	#7	EDGE BAR
				7E7	6'-11"	#7	EDGE BAR

(TILT BAR FROM VERTICAL IF NECESSARY TO MAINTAIN COVER)

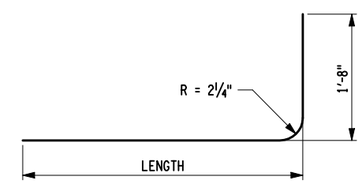

TYPICAL EDGE BAR

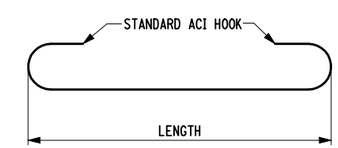

TYPICAL W BAR, L BAR, OR D BAR

BOTTOM REINFORCEMENT

TOP SLAB WITH ROUND CAST MANHOLE FRAME

STR. TYPE	NO. OF BARS	DESIG-NATION	NO. OF BARS	DESIG-NATION	NO. OF BARS	DESIG-NATION	NO. OF BARS	DESIG-NATION	NO. OF BARS	DESIG-NATION	NO. OF BARS	DESIG-NATION	NO. OF BARS	DESIG-NATION
A			1	6LX1			1	6WY1	3	6D1	4	6E1		
B			3	6LX1	5	6WS2	1	6WY3	3	6D1	2	6E3	2	6E1
C			5	6LX1	5	6WS10	1	6WY5	3	6D1	2	6E5	2	6E1
D			8	6LX1	5	6WS21	1	6WY7	3	6D1	2	6E7	2	6E1
E	5	6LS4	1	6LX3			3	6WY1	3	6D1	2	6E1	2	6E3
F	5	6LS4	3	6LX3	5	6WS2	3	6WY3	3	6D1	4	6E3		
G	5	6LS4	5	6LX3	5	6WS10	3	6WY5	3	6D1	2	6E5	2	6E3
H	5	7LS4	8	7LX3	5	7WS20	3	7WY7	3	6D1	2	7E7	2	7E3
I	5	6LS14	1	6LX5			5	6WY1	3	6D1	2	6E1	2	6E5
J	5	6LS14	3	6LX5	5	6WS6	5	6WY3	3	6D1	2	6E3	2	6E5
K	5	6LS14	5	6LX5	5	6WS7	5	6WY5	3	6D1	4	6E5		
L	5	7LS14	8	7LX5	5	7WS20	5	7WY7	3	6D1	2	7E7	2	7E5
M	5	6LS25	1	6LX7			8	6WY1	3	6D1	2	6E1	2	6E7
N	5	7LS25	3	7LX7	5	7WS2	8	7WY3	3	6D1	2	7E3	2	7E7
O	5	7LS25	5	7LX7	5	7WS7	8	7WY5	3	6D1	2	7E5	2	7E7
P	5	7LS25	8	7LX7	5	7WS20	8	7WY7	3	6D1	4	7E7		

TOP SLAB DIMENSIONS

STRUCTURE TYPE	6" THICK WALLS		8" THICK WALLS		TOP REINFORCEMENT (NOTES 3 AND 4)
	WIDTH	LENGTH	WIDTH	LENGTH	
A	4'-0"	4'-0"	4'-4"	4'-4"	6" X 6" W4 X W4
B	5'-0"	4'-0"	5'-4"	4'-4"	6" X 6" W4 X W4
C	6'-0"	4'-0"	6'-4"	4'-4"	6" X 6" W4 X W4
D	7'-8"	4'-0"	8'-0"	4'-4"	6" X 6" W4 X W4
E	4'-0"	5'-0"	4'-4"	5'-4"	6" X 6" W4 X W4
F	5'-0"	5'-0"	5'-4"	5'-4"	6" X 6" W4 X W4
G	6'-0"	5'-0"	6'-4"	5'-4"	6" X 6" W4 X W4
H	7'-8"	5'-0"	8'-0"	5'-4"	6" X 6" W5 X W5
I	4'-0"	6'-0"	4'-4"	6'-4"	6" X 6" W4 X W4
J	5'-0"	6'-0"	5'-4"	6'-4"	6" X 6" W4 X W4
K	6'-0"	6'-0"	6'-4"	6'-4"	6" X 6" W4 X W4
L	7'-8"	6'-0"	8'-0"	6'-4"	6" X 6" W5 X W5
M	4'-0"	7'-8"	4'-4"	8'-0"	6" X 6" W5 X W5
N	5'-0"	7'-8"	5'-4"	8'-0"	6" X 6" W5 X W5
O	6'-0"	7'-8"	6'-4"	8'-0"	6" X 6" W5 X W5
P	7'-8"	7'-8"	8'-0"	8'-0"	6" X 6" W5 X W5

TOP SLAB REINFORCEMENT NOTES:

1. THE E BARS (EDGE BARS) ARE PLACED 3" FROM THE OUTSIDE EDGE FOR TOP SLABS ON 6" WALLS, AND 5: FROM THE OUTSIDE EDGE FOR 8" WALLS.
2. THE LX BARS ARE LOCATED USING THE X DIMENSIONS AND THE WY BARS ARE LOCATED USING THE Y DIMENSIONS. ALL W AND L BARS SHALL BE EVENLY SPACED AT APPROX. 6". SO THAT THE DISTANCE BETWEEN THE LAST W OR L BAR AND ADJACENT EDGE BAR SHALL NOT EXCEED 10".
3. TOP SLABS FOR TYPE A, B, C, D, F, G, I, J, K AND MOST M DRAINAGE STRUCTURES ARE REINFORCED WITH #6 AND 6X6, W4 X W4 FABRIC.
4. TOP SLABS FOR TYPE H, L, N, O, P AND PART OF TYPE M DRAINAGE STRUCTURES ARE REINFORCED WITH #7 BARS AND 6X6, W5 X W5 FABRIC. THE CONTRACTOR HAS THE OPTION OF USING #6 BARS AND A BAR SPACING OF 5". WHEN THIS OPTION IS USED, THE MAXIMUM DISTANCE BETWEEN THE LAST W OR L BAR AND THE EDGE BAR SHALL NOT EXCEED 9"

STATE OF NEW YORK
DEPARTMENT OF TRANSPORTATION

U.S. CUSTOMARY STANDARD SHEET

DRAINAGE STRUCTURE DETAILS
(SHEET 3 OF 4)

APPROVED SEPTEMBER 19, 2008

/S/ DANIEL D'ANGELO, P.E.
DEPUTY CHIEF ENGINEER
(DESIGN)

ISSUED UNDER EB 08-036

604-02

EFFECTIVE DATE: 01/08/09

FILE NAME = IP_PWRd01095653\604-0203.dgn
DATE/TIME = 06-NOV-2008 15:01
USER = jturley

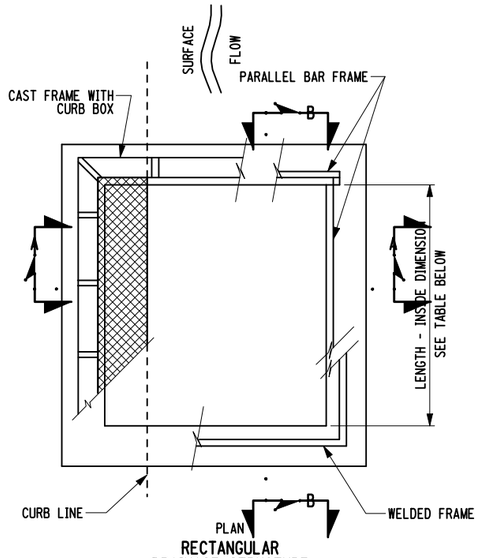

RECTANGULAR DRAINAGE STRUCTURE
TYPE Q, R, S, T, AND U

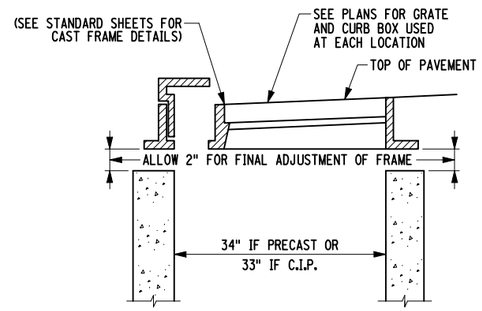

SECTION A-A
RECTANGULAR DRAINAGE STRUCTURE
TYPE Q AND R

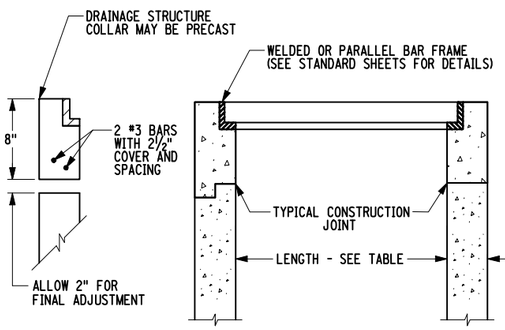

SECTION B-B
RECTANGULAR DRAINAGE STRUCTURE
TYPE S, T, AND U

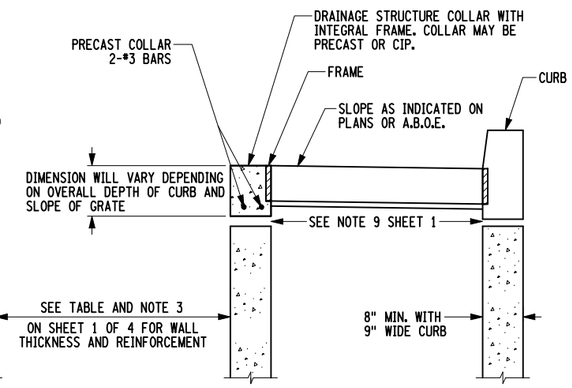

SECTION A-A
RECTANGULAR DRAINAGE STRUCTURE WITH COLLAR AND CURB
TYPE S, T, AND U
ONLY PARALLEL BAR FRAME AND GRATE ALLOWED WITH THIS DETAIL

RECTANGULAR DRAINAGE STRUCTURE						
(TYPES Q THRU U)			INSIDE DIMENSIONS			
			PRECAST ••		CAST IN PLACE	
ITEM	TYPE	FRAME	WIDTH	LENGTH	WIDTH	LENGTH
604.301772	Q	F2•	34	36	33	36½
604.301873	R	F3•	34	46	33	46½
604.301911	S	11	24	32	24	32½
604.301990	S	10PCB	24	32	24	32½
604.302016	T	16	26	42	26½	42½
604.302091	T	11PCB	26	42	26½	42½
604.302122	U	22	34	38	34	37½
604.302192	U	12PCB	34	38	34	37½

• SEE CONTRACT DOCUMENTS FOR GRATE AND CURB BOX TYPE

•• PRECAST TYPES S,T, AND U REQUIRE THE FRAME TO BE CAST INTO A SEPARATE COLLAR. THE FRAME COLLAR SHALL HAVE INSIDE DIMENSIONS AS SHOWN FOR "CAST-IN-PLACE" IN THIS TABLE, OUTSIDE DIMENSIONS TO MATCH THE PRECAST RISER, AND BE 8" HIGH MIN.

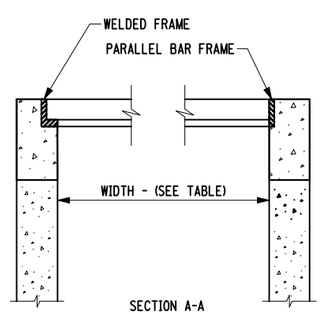

SECTION A-A
RECTANGULAR DRAINAGE STRUCTURE
TYPE S, T, AND U

SELECTION TABLES FOR ALTERNATE ROUND DRAINAGE STRUCTURES						
CONCRETE OR POLYETHYLENE PIPES		STRUCTURE INTERNAL DIAMETER				
		48"	60"	72"	84"	96"
RCP H.E. RISE X SPAN	ROUND INTERNAL DIAMETER	MINIMUM ANGLE BETWEEN PIPE ENTRIES (NOTE 5)				
	12"	84	63	50	41	35
	15"	94	70	56	46	39
	18"	104	78	62	51	43
	21"	115	85	68	56	48
	24"	127	93	74	61	52
	27"	141	102	81	67	57
	30"	157	111	87	72	61
19" X 30"		157	112	88	73	62
	34"		121	95	78	66
22" X 34"			125	97	80	68
	36"		133	102	84	71
24" X 38"			140	106	87	74
27" X 42"			156	115	94	79
	42"		164	119	96	81
29" X 45"				130	104	87
	48"			140	110	92
32" X 49"				145	113	94
34" X 53"				166	123	101
	54"			175	126	104
	60"				147	117

SELECTION TABLES FOR ALTERNATE ROUND DRAINAGE STRUCTURES						
METAL PIPES		STRUCTURE INTERNAL DIAMETER				
		48"	60"	72"	84"	96"
CMP ARCH SPAN AND RISE	ROUND INTERNAL DIAMETER	MINIMUM ANGLE BETWEEN PIPE ENTRIES (NOTE 5)				
	12"	68	54	45	38	34
	15"	76	60	50	43	37
17" X 13"		82	64	53	45	40
	18"	85	67	55	47	41
		91	71	59	50	43
21" X 15"	21"	94	73	60	51	45
24" X 18"	24"	103	80	66	56	49
28" X 20"		116	89	73	62	54
	30"	124	94	76	65	56
35" X 24"		145	106	86	72	63
	36"	152	110	88	74	64
42" X 29"	42"		128	101	84	72
	48"		153	115	95	81
49" X 33"			158	117	96	82
	54"			132	106	90
57" X 38"				141	112	94
60" X 46"				150	117	98
	60"			154	119	100
64" X 43"					129	107
	66"				134	110
71" X 47"					151	120
	72"				155	122

NOTES:

1. THE DIAMETER OF THE ALTERNATE ROUND UNIT SHALL NOT BE LESS THAN THE LARGER DIMENSION OF THE SPECIFIED RECTANGULAR UNIT IT REPLACES. IT SHALL ALSO BE LARGE ENOUGH TO HAVE THE SPECIFIED GRATE FIT WITHIN THE INSIDE DIAMETER OF THE ROUND ALTERNATE.
2. THE ABOVE VALUES ARE BASED ON THE CENTERLINE OF ALL PIPES INTERSECTING AT THE CENTER OF THE ROUND ALTERNATE.
3. THE ANGLE BETWEEN ADJACENT PIPE ENTRIES SHALL NOT BE LESS THAN THE MINIMUM SHOWN IN THE TABLE ABOVE. WHEN THE ADJACENT PIPES HAVE DIFFERENT SIZES, THE MINIMUM ANGLE SHALL BE THE VALUE FOR THE LARGER OF THE TWO PIPES.
4. THE SUM OF THE MINIMUM ANGLES BETWEEN PIPES AT THE SAME LEVEL SHALL NOT BE MORE THAN 360 DEGREES. THEY SHALL BE REGARDED AS BEING AT THE SAME LEVEL IF THEIR RISES OVERLAP.
5. A BLANK (NO ENTRY) IN TABLE INDICATES THAT THE STRUCTURE IS TOO SMALL FOR PIPE OF THAT SIZE.

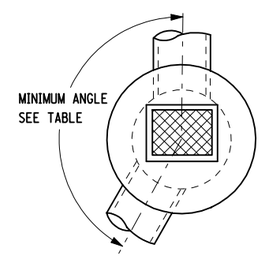

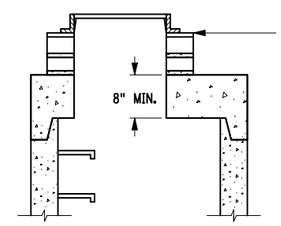

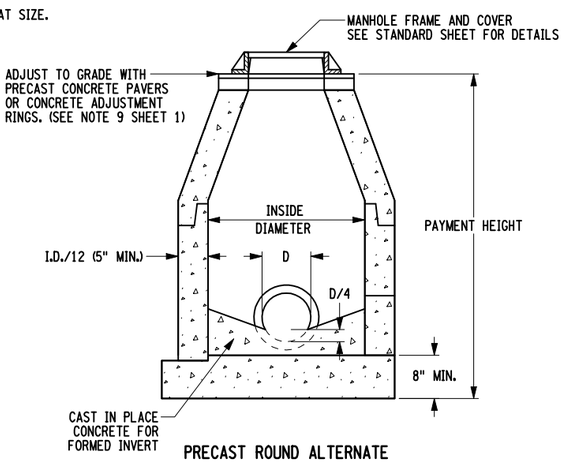

PRECAST ROUND ALTERNATE
ALTERNATE FLOOR SLABS SHOWN

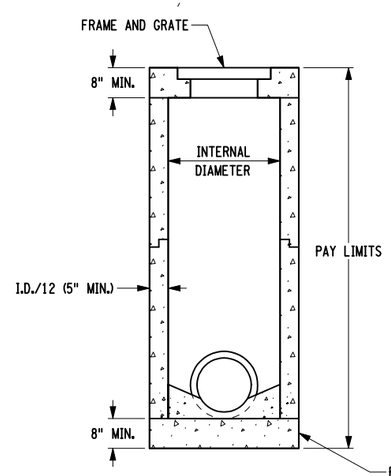

PRECAST ROUND ALTERNATE
ROUND ALTERNATE MAY BE USED WHEN ALLOWED BY THE SPECIFICATIONS OR WHEN INDICATED ON PLANS

PRECAST ROUND MANHOLES			
ITEM	TYPE	CIRCUMFERENTIAL STEEL - SQUARE INCHES PER VERTICAL FOOT	INSIDE DIAMETER
604.4048	48	0.12	48
604.4060	60	0.15	60
604.4072	72	0.18	72
604.4084	84	0.21	84
604.4096	96	0.24	96

STATE OF NEW YORK
DEPARTMENT OF TRANSPORTATION

U.S. CUSTOMARY STANDARD SHEET

DRAINAGE STRUCTURE DETAILS
(SHEET 4 OF 4)

EFFECTIVE DATE: 01/08/09

APPROVED SEPTEMBER 19, 2008
/S/ DANIEL D'ANGELO, P.E.
DEPUTY CHIEF ENGINEER (DESIGN)

ISSUED UNDER EB 08-036

604-02

FILE NAME = 604-0204.dgn
DATE/TIME = 08-MAR-2010 13:58
USER = jturley

GENERAL NOTES

1. THE TYPICAL DETAILS DEPICTED ON THE STANDARD SHEETS AND IN THE MUTCD, REFLECT THE MINIMUM REQUIREMENTS.

2. THE CONTRACTOR MUST SUBMIT TO THE ENGINEER, IN WRITING, PROPOSED REVISIONS TO THE TRAFFIC CONTROL PLAN FOR REVIEW AND APPROVAL BY THE REGIONAL DIRECTOR OR HIS/HER DESIGNEE FIVE (5) WORK DAYS PRIOR TO THE PLANNED IMPLEMENTATION OF SUCH PROPOSED REVISIONS, EXCEPT FOR CHANGES THAT ALTER THE SCOPE OF THE TRAFFIC CONTROL PLAN. SUCH CHANGES IN SCOPE MUST BE SUBMITTED TO THE ENGINEER FOR APPROVAL BY THE REGIONAL DIRECTOR OR HIS/HER DESIGNEE THIRTY (30) WORKING DAYS PRIOR TO IMPLEMENTATION OF SUCH REVISIONS.

3. THE CONTRACTOR SHALL PROVIDE THE ENGINEER, IN WRITING, WITH THE NAMES, ADDRESSES, AND TELEPHONE NUMBERS OF STAFF WHO ARE AUTHORIZED TO SECURE LABOR, MATERIALS, AND EQUIPMENT FOR EMERGENCY REPAIRS OUTSIDE NORMAL WORKING HOURS. THE ENGINEER WILL PROVIDE THE SUBMITTED INFORMATION TO REGIONAL MANAGEMENT, THE NEW YORK STATE POLICE, THE RESIDENT ENGINEER, AND THE LOCAL POLICE.

ACTIVITY AREA

1. THE CONTRACTOR SHALL MAINTAIN A MINIMUM 500' LONGITUDINAL DISTANCE BETWEEN CONSTRUCTION OPERATIONS ON ALTERNATE SIDES OF THE ROADWAY, UNLESS OTHERWISE APPROVED BY THE ENGINEER.

2. WHEN TWO OR MORE AREAS ARE ADJACENT, OVERLAP, OR ARE IN CLOSE PROXIMITY, THE CONTRACTOR SHALL ENSURE THERE ARE NO CONFLICTING SIGNS AND THAT LANE CONTINUITY IS MAINTAINED THROUGHOUT ALL WORK AREAS.

SIGNS

1. THE LOCATIONS OF THE SIGNS SHOWN ON THE WORK ZONE TRAFFIC CONTROL PLANS AND DETAILS MAY BE ADJUSTED BASED ON SIGHT DISTANCE AND OTHER CONSIDERATIONS. THE FINAL LOCATIONS OF SIGNS ARE SUBJECT TO APPROVAL OF THE ENGINEER.

2. ANY EXISTING SIGNS, INCLUDING OVERHEAD SIGNS, WHICH CONFLICT WITH THE TEMPORARY TRAFFIC CONTROL SIGN LAYOUT SHALL BE COVERED, REMOVED, STORED OR RESET, AS APPROVED BY THE ENGINEER. ALL APPROPRIATE EXISTING SIGNS SHALL BE RESTORED TO THEIR ORIGINAL CONDITION AND/OR LOCATION UNLESS OTHERWISE REPLACED IN THIS CONTRACT.

3. SIGNS AT OR NEAR INTERSECTIONS SHALL BE PLACED SO THAT THEY DO NOT OBSTRUCT A MOTORIST'S LINE OF SIGHT.

4. ALL WARNING AND REGULATORY SIGNS SHALL BE POSTED ON BOTH SIDES OF MULTI-LANE DIVIDED HIGHWAYS, MULTI-LANE RAMPS, AND ONE-WAY STREETS. IN CASES WHERE LANE RESTRICTIONS REDUCE THE TRAVEL LANE TO ONE LANE, SIGNS SHALL BE POSTED ON THE RIGHT SIDE OF THE ACTIVE TRAVEL LANE, UNLESS OTHERWISE AUTHORIZED BY THE ENGINEER.

5. SIGNS MOUNTED ON THE MEDIAN OF DIVIDED HIGHWAYS WHERE MEDIAN BARRIER IS IN PLACE MAY BE MOUNTED ON THE BARRIER WITH A SADDLE TYPE BRACKET. LAYING THE SIGN DOWN IN A HORIZONTAL POSITION IS NOT PERMITTED.

6. THE DIMENSIONS OF WORK ZONE TRAFFIC CONTROL SIGNS ARE DESCRIBED IN THE MUTCD. ANY CHANGES TO THE DIMENSIONS SHALL BE APPROVED BY THE REGIONAL DIRECTOR OR BY HIS/HER DESIGNEE.

7. NYR9-12 MAY BE USED IN PLACE OF NYR9-11.

CHANNELIZING DEVICES

1. WHERE POSSIBLE ALL CHANNELIZING AND GUIDING DEVICES ARE TO BE PLACED SO AS TO PROVIDE A MINIMUM 2' LATERAL CLEARANCE TO THE TRAVELED WAY.

PUBLIC ACCESS

1. PROPERTY OWNERS WHOSE DRIVEWAYS WILL BE MADE INACCESSIBLE SHALL BE NOTIFIED BY THE CONTRACTOR AT LEAST 24 HOURS PRIOR TO RESTRICTING USE OF THE DRIVEWAY. FOR MULTIPLE ACCESS PROPERTIES, AT LEAST ONE DRIVEWAY SHALL BE OPEN AT ALL TIMES. ACCESS SHALL BE RESTORED TO ALL DRIVEWAYS AS SOON AS POSSIBLE.

2. SUITABLE RAMPS SHALL BE INSTALLED TO MAINTAIN SMOOTH TRANSITIONS FROM RESIDENTIAL AND COMMERCIAL DRIVEWAYS TO AND FROM THE WORK AREA.

LANE CLOSURES

1. THE CONTRACTOR SHALL LOCATE LANE CLOSURES TO PROVIDE OPTIMUM VISIBILITY, I.E. BEFORE CURVES AND CRESTS, TO THE EXTENT CONDITIONS PERMIT.

2. THE ENGINEER MAY REQUIRE THAT ALL LANES BE RE-OPENED AT ANY TIME IF THE ROUTE IS NEEDED FOR EMERGENCY PURPOSES. THIS COULD INCLUDE INCIDENTS AT LOCATIONS OUTSIDE THE CONTRACT LIMITS.

LANE WIDTHS

1. UNLESS AUTHORIZED BY THE ENGINEER, THE MINIMUM LANE WIDTHS FOR WORK ZONE TRAVEL LANES SHALL BE AS FOLLOWS: FREEWAYS AND/OR EXPRESSWAYS IS 11'. THE MINIMUM LANE WIDTH FOR ALL OTHER TYPES OF ROADWAYS IS 10'.

2. THE CONTRACTOR SHALL PROVIDE A WRITTEN NOTICE TO THE ENGINEER, A MINIMUM OF 21 CALENDAR DAYS IN ADVANCE OF PERFORMING ANY WORK THAT RESULTS IN THE REDUCED WIDTH OF AN EXISTING ROADWAY, SO THAT THE ENGINEER MAY NOTIFY THE REGIONAL PERMIT ENGINEER IN A TIMELY MANNER.

BARRIER/SHADOW VEHICLES

1. BARRIER AND SHADOW VEHICLES SHALL BE REQUIRED AS PER STANDARD SHEET TITLED "WORK ZONE TRAFFIC CONTROL LEGENDS AND NOTES".

2. NO WORK ACTIVITY, EQUIPMENT, VEHICLES AND/OR MATERIALS SHALL BE LOCATED BETWEEN THE BARRIER OR SHADOW VEHICLE AND THE ACTIVE WORK AREA (ROLL AHEAD DISTANCE).

3. THE CONTRACTOR MAY BE REQUIRED TO PROVIDE A BARRIER VEHICLE IN CONJUNCTION WITH POLICE PRESENCE IN THE WORK ZONE, TO BE INCLUDED IN THE UNIT BID PRICE FOR BASIC WORK ZONE TRAFFIC CONTROL.

EFFECTIVE DATE: 01/08/09

STATE OF NEW YORK
DEPARTMENT OF TRANSPORTATION

U.S. CUSTOMARY STANDARD SHEET

WORK ZONE TRAFFIC CONTROL
GENERAL NOTES

APPROVED SEPTEMBER 18, 2008

/S/ DAVID J. CLEMENTS, P.E.
DIRECTOR, OFFICE OF
TRAFFIC SAFETY AND MOBILITY

ISSUED UNDER EB 08-036

619-10

FILE NAME = IP_PWP:d0109553\619-10.dgn
DATE/TIME = 06-NOV-2008 15:03
USER = jturley

TABLE NY1-A
BARRIER VEHICLE USE REQUIREMENTS
(LONG TERM, INTERMEDIATE TERM, AND SHORT TERM STATIONARY CLOSURES)

CLOSURE TYPE	EXPOSURE CONDITION[1]	USE REQUIREMENTS[4,5]			
		FREEWAY	NON-FREEWAY (PRECONSTRUCTION POSTED SPEED LIMIT)		
			≥ 45 MPH	35-40 MPH	≤ 30 MPH
LANE CLOSURE	WORKERS ON FOOT OR IN VEHICLES EXPOSED TO TRAFFIC	REQUIRED[3]	REQUIRED[3]	REQUIRED[3]	OPTIONAL[2]
	NON-TRAVERSABLE HAZARD (IE. EQUIPMENT, MATERIALS, EXCAVATION) ONLY NO WORKERS EXPOSED	REQUIRED[3]	REQUIRED[3]	OPTIONAL[2]	OPTIONAL[2]
SHOULDER CLOSURE	WORKERS ON FOOT OR IN VEHICLES EXPOSED TO TRAFFIC	REQUIRED[3]	REQUIRED[3]	OPTIONAL[2]	OPTIONAL[2]
	NON-TRAVERSABLE HAZARD (IE. EQUIPMENT, MATERIALS, EXCAVATION) ONLY NO WORKERS EXPOSED	REQUIRED[3]	OPTIONAL[2]	OPTIONAL[2]	OPTIONAL[2]

1. THE EXPOSURE CONDITIONS DESCRIBED IN TABLE NY1-A ASSUMES THERE IS NO POSITIVE PROTECTION (TEMPORARY TRAFFIC BARRIER) PRESENT. WHERE WORKERS OR HAZARDS ARE PROTECTED BY A TEMPORARY TRAFFIC BARRIER, BARRIER VEHICLES ARE NOT REQUIRED.
2. WHERE THE REQUIREMENT IS "OPTIONAL", EITHER A BARRIER VEHICLE OR THE STANDARD LONGITUDINAL BUFFER SPACE (TABLE 6C-2) SHALL BE PROVIDED.
3. REQUIREMENTS SHALL INCLUDE PROVIDING A SEPARATE BARRIER VEHICLE FOR EACH CLOSED LANE AND EACH CLOSED PAVED SHOULDER 8' OR GREATER IN WIDTH. IF THE WORK SPACE MOVES WITHIN THE STATIONARY CLOSURE, THE BARRIER VEHICLE SHALL BE REPOSITIONED ACCORDINGLY. BARRIER VEHICLES PROTECTING NON-TRANSVERSABLE HAZARDS SHALL REMAIN IN PLACE DURING BOTH WORKING AND NON-WORKING HOURS UNTIL THE HAZARD NO LONGER EXISTS. EXCEPTIONS TO THESE REQUIREMENTS MAY BE MADE, AS APPROVED BY THE REGIONAL DIRECTOR OR HIS/HER DESIGNEE WHERE BARRIER VEHICLE PLACEMENT WOULD BE INEFFECTIVE OR WOULD INTERFERE WITH THE SAFE OPERATION OF TRAFFIC.
4. BARRIER VEHICLES ARE NOT REQUIRED FOR MILLING AND/OR PAVING OPERATIONS, BUT THE STANDARD LONGITUDINAL BUFFER SPACE (TABLE 6C-2) SHALL BE PROVIDED.
5. BARRIER VEHICLES ARE NOT REQUIRED FOR FLAGGING OPERATIONS, BUT THE STANDARD LONGITUDINAL BUFFER SPACE (TABLE6C-2) SHALL BE PROVIDED.

TABLE NY1-B
SHADOW VEHICLE USE REQUIREMENTS
(MOBILE CLOSURES)

CLOSURE TYPE	EXPOSURE CONDITION	USE REQUIREMENTS			
		FREEWAY	NON-FREEWAY (PRECONSTRUCTION POSTED SPEED LIMIT)		
			≥ 45 MPH	35-40 MPH	≤ 30 MPH
LANE CLOSURE	WHEN ANY WORKER, VEHICLE, OR OTHER HAZARD IS EXPOSED TO TRAFFIC	REQUIRED[2,4]	REQUIRED[2,4]	REQUIRED[2,4]	REQUIRED[2,4]
SHOULDER CLOSURE	WHEN ANY WORKER, VEHICLE, OR OTHER HAZARD IS EXPOSED TO TRAFFIC	REQUIRED[2,4]	REQUIRED[2,4]	REQUIRED[2,4]	REQUIRED[2,4]

1. A MOBILE CLOSURE SHALL BE USED FOR ANY WORK ACTIVITY THAT MOVES CONTINUOUSLY OR INTERMITTENTLY ALONG THE TRAVELED WAY OR SHOULDER SLOWER THAN THE PREVAILING SPEED OF TRAFFIC. CHANNELIZING DEVICES ARE NOT USED FOR MOBILE CLOSURES.
2. SHADOW VEHICLES SHALL BE EQUIPPED WITH AN APPROVED REAR MOUNTED ATTENUATOR (TRUCK MOUNTED OR TRAILER MOUNTED) FOR THE FOLLOWING MOBILE CLOSURES: LANE CLOSURES ON FREEWAYS, LANE CLOSURES ON NON-FREEWAY ROADWAYS HAVING A PRE-CONSTRUCTION POSTED SPEED LIMIT OF 35 MPH OR MORE, SHOULDER CLOSURES ON FREEWAYS, AND SHOULDER CLOSURES ON NON-FREEWAY ROADWAYS HAVING A PRE-CONSTRUCTION SPEED LIMIT OF 45 MPH OR MORE.
3. FOR MOBILE LANE CLOSURES ON NON-FREEWAY ROADWAYS HAVING A PRE-CONSTRUCTION POSTED SPEED LIMIT OF 30 MPH OR LESS AND MOBILE SHOULDER CLOSURES ON NON-FREEWAY ROADWAYS HAVING A PRE-CONSTRUCTION SPEED LIMIT OF 40 MPH OR LESS, SHADOW VEHICLES ARE NOT REQUIRED TO BE EQUIPPED WITH A REAR MOUNTED ATTENUATOR.
4. A SHADOW VEHICLE IS USED TO PROTECT EXPOSED WORKERS (ON FOOT OR IN A VEHICLE) AND SHALL BE REQUIRED FOR ALL MOBILE CLOSURES. SHADOW VEHICLE REQUIREMENTS SHALL INCLUDE PROVIDING A SEPARATE SHADOW VEHICLE FOR EACH CLOSED LANE AND EACH CLOSED PAVED SHOULDER 8' OR GREATER IN WIDTH. ADDITIONAL SHADOW VEHICLES MAY BE REQUIRED TO PROMOTE THE SAFE OPERATION OF TRAFFIC AND THE INCREASED PROTECTION OF EXPOSED WORKERS, AS DIRECTED BY THE REGIONAL DIRECTOR OR HIS/HER DESIGNEE.

TABLE 6H-4 FORMULAS FOR DETERMINING TAPER LENGTHS

SPEED LIMIT (S) (MPH)	TAPER LENGTH (L) (FT.)	
(40 MPH) OR LESS	$L = WS^2/60$	L = TAPER LENGTH W = WIDTH OF OFFSET (FT.) S = PRECONSTRUCTION POSTED SPEED LIMIT (MPH)
(45 MPH) OR MORE	L = WS	

STANDARD TAPER LENGTHS

LATERAL SHIFT OF TRAFFIC FLOW PATH	TEMPORARY TRAFFIC CONTROL ZONE POSTED SPEED LIMIT									
	(25 MPH)	(30 MPH)	(35 MPH)	(40 MPH)	(45 MPH)	(50 MPH)	(55 MPH)	(60 MPH)	(65 MPH)	(70 MPH)
4	45	60	85	110	180	200	220	240	260	280
5	55	75	105	135	225	250	275	300	325	350
6	65	90	125	160	270	300	330	360	390	420
7	75	105	145	190	315	350	385	420	455	490
8	85	120	165	215	360	400	440	480	520	560
9	95	135	185	240	405	450	495	540	585	630
10	105	150	205	270	450	500	550	600	650	700
11	115	165	225	295	495	550	605	660	715	770
12	125	180	245	320	540	600	660	720	780	840

TABLE 6C-2
LONGITUDINAL BUFFER SPACE

PRECONSTRUCTION POSTED SPEED LIMIT (MPH)	DISTANCE
25	155 FT.
30	200 FT.
35	250 FT.
40	305 FT.
45	360 FT.
50	425 FT.
55	495 FT.
60	570 FT.
65	645 FT.

TABLE NY2-A
PLACEMENT DISTANCE FOR BARRIER VEHICLES

PRECONSTRUCTION POSTED SPEED LIMIT (MPH)	PLACEMENT DISTANCE (FT.) BARRIER VEHICLES•			
	(18000 LBS.)		(24000 LBS.)	
	MINIMUM	MAXIMUM	MINIMUM	MAXIMUM
> 55	100 FT.	200 FT.	100 FT.	200 FT.
45 - 55	100 FT.	200 FT.	85 FT.	165 FT.
< 45	85 FT.	165 FT.	50 FT.	100 FT.

• AS DEFINED IN NYSDOT STANDARD SPECIFICATION 619:

BARRIER VEHICLE - VEHICLE USED FOR STATIONARY SHOULDER CLOSURES, LANE CLOSURES, AND OTHER STATIONARY WORK ZONES.

MINIMUM DISTANCE SHOWN REFLECTS THE ACTUAL ROLL AHEAD DISTANCE FROM MANUFACTURER.

TABLE NY2-B
PLACEMENT DISTANCE FOR SHADOW VEHICLES

PRECONSTRUCTION POSTED SPEED LIMIT (MPH)	PLACEMENT DISTANCE (FT.) SHADOW VEHICLES••			
	(18000 LBS.)		(24000 LBS.)	
	MINIMUM	MAXIMUM	MINIMUM	MAXIMUM
> 55	230 FT.	330 FT.	180 FT.	280 FT.
45 - 55	180 FT.	280 FT.	150 FT.	250 FT.
< 45	100 FT.	200 FT.	100 FT.	200 FT.

• AS DEFINED IN NYSDOT STANDARD SPECIFICATION 619:

SHADOW VEHICLE - VEHICLE USED FOR MOBILE OR SHORT DURATION WORK OPERATIONS.

MINIMUM DISTANCE SHOWN REFLECTS THE ACTUAL ROLL AHEAD DISTANCE FROM MANUFACTURER.

TABLE 6C-3
TAPER LENGTH FOR TEMPORARY TRAFFIC CONTROL ZONES

TYPE OF TAPER	TAPER LENGTH (L)
MERGING TAPER	L
SHIFTING TAPER	L/2
SHOULDER TAPER	L/3
ONE-LANE, TWO-WAY TRAFFIC TAPER	100 FT. MAXIMUM
DOWNSTREAM TAPER	100 FT. PER LANE

TABLE 619-4
FLARE RATES FOR POSITIVE BARRIER

TYPE OF POSITIVE BARRIER	POSTED SPEED LIMIT				
	30 MPH	40 MPH	50 MPH	55 MPH	65 MPH
TEMPORARY CONCRETE BARRIER	8:1	11:1	14:1	16:1	20:1
BOX BEAM OR HEAVY POST CORRUGATED BEAM	7:1	9:1	11:1	12:1	15:1

TABLE NY6H-3
ADVANCE WARNING SIGN SPACING

ROAD TYPE	DISTANCE BETWEEN SIGNS			SIGN LEGEND	
	A (FT.)	B (FT.)	C (FT.)	XX	YY
URBAN (≤ 30 MPH•)	100	100	100	AHEAD	AHEAD
URBAN (35-40 MPH•)	200	200	200	AHEAD	AHEAD
URBAN (≥ 45 MPH•)	350	350	350	1000 FT.	AHEAD
RURAL	500	500	500	1500 FT.	1000 FT.
EXPRESSWAY / FREEWAY	1000	1500	2640	1 MILE	½ MILE

• PRECONSTRUCTION POSTED SPEED LIMIT

URBAN: (MEETS MORE THAN 1 OF THE FOLLOWING CRITERIA) SIDEWALKS, BICYCLE USAGE, CURBING, CLOSED DRAINAGE SYSTEMS, DRIVEWAY DENSITIES GREATER THAN 24 DRIVEWAYS PER MILE, MINOR COMMERCIAL DRIVEWAY DENSITIES OF 10 DRIVEWAYS PER MILE OR GREATER, MAJOR COMMERCIAL DRIVEWAYS, NUMEROUS RIGHT OF WAY CONSTRAINTS, HIGH DENSITY OF CROSS STREETS, 85TH PERCENTILE SPEEDS OF 45 MPH OR LESS.

RURAL: ANY AREA NOT EXHIBITING MORE THAN ONE OF THE ABOVE CHARACTERISTICS.

EXPRESSWAY: DIVIDED HIGHWAYS FOR TRAFFIC WITH FULL OR PARTIAL CONTROL OF ACCESS AND GENERALLY WITH GRADE SEPARATIONS AT MAJOR CROSSROADS.

FREEWAYS/INTERSTATE: LOCAL OR INTER REGIONAL HIGH-SPEED, DIVIDED, HIGH-VOLUME FACILITIES WITH FULL OR PARTIAL CONTROL OF ACCESS.

WORK DURATION DEFINITIONS

LONG-TERM STATIONARY IS WORK THAT OCCUPIES A LOCATION MORE THAN 3 CONSECUTIVE DAYS.

INTERMEDIATE-TERM STATIONARY IS WORK THAT OCCUPIES A LOCATION MORE THAN ONE DAYLIGHT PERIOD UP TO 3 CONSECUTIVE DAYS, OR NIGHTTIME WORK LASTING MORE THAN 1 HOUR.

SHORT-TERM STATIONARY IS DAYTIME WORK THAT OCCUPIES A LOCATION FOR MORE THAN 1 HOUR WITHIN A SINGLE DAYLIGHT PERIOD.

SHORT DURATION IS WORK THAT OCCUPIES A LOCATION UP TO 1 HOUR.

MOBILE IS WORK THAT MOVES INTERMITTENTLY OR CONTINUOUSLY.

WORK ZONE TRAFFIC CONTROL LEGEND

SYMBOL	DESCRIPTION
	ARROW PANEL
	ARROW PANEL, CAUTION MODE
	ARROW PANEL TRAILER OR SUPPORT
	CHANGEABLE MESSAGE SIGN (PVMS)
	CHANNELIZING DEVICE
	CRASH CUSHION/TEMPORARY IMPACT ATTENUATOR
	DIRECTION OF TEMPORARY TRAFFIC DETOUR
	DIRECTION OF TRAFFIC
	FLAGGER
	FLAG TREE
	LUMINAIRE
	PAVEMENT MARKINGS THAT SHALL BE REMOVED FOR A LONG TERM PROJECT
	SIGN, TEMPORARY
	TEMPORARY BARRIER
	TEMPORARY BARRIER WITH WARNING LIGHTS
	TRAFFIC OR PEDESTRIAN SIGNAL
	TYPE III BARRICADE
	WARNING LIGHTS
	WORK SPACE
	WORK VEHICLE
	WORK VEHICLE WITH TRUCK MOUNTED ATTENUATOR

STATE OF NEW YORK
DEPARTMENT OF TRANSPORTATION

U.S. CUSTOMARY STANDARD SHEET

WORK ZONE TRAFFIC CONTROL LEGENDS AND NOTES

APPROVED SEPTEMBER 18, 2008

/S/ DAVID J. CLEMENTS, P.E.
DIRECTOR, OFFICE OF TRAFFIC SAFETY AND MOBILITY

ISSUED UNDER EB 08-036

619-11

EFFECTIVE DATE: 01/08/09

FILE NAME = IP_PWP:d0109553\619-11.dgn
DATE/TIME = 06-NOV-2008 15:03
USER = jturley

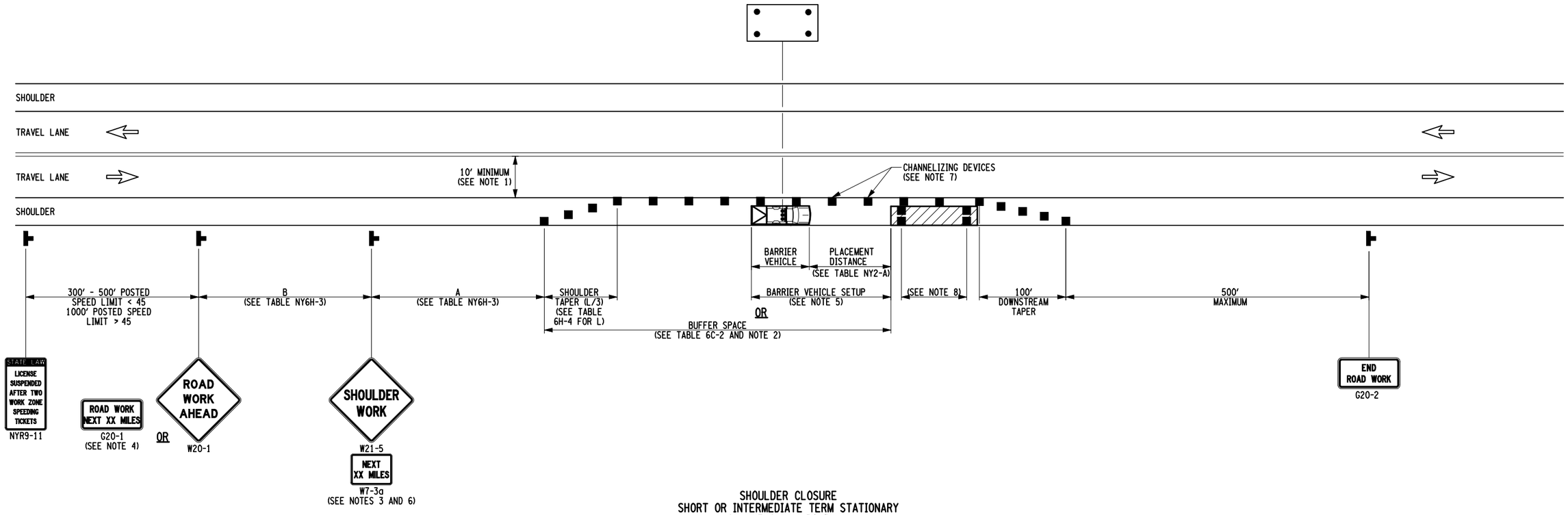

SHOULDER CLOSURE
SHORT OR INTERMEDIATE TERM STATIONARY
2-LANE 2-WAY ROADWAY
(NOT TO SCALE)

NOTES:

1. WHEN THE MINIMUM LANE WIDTH OF 10' CANNOT BE MAINTAINED DUE TO A SHOULDER CLOSURE, USE THE DETAIL FOR SHORT OR INTERMEDIATE TERM STATIONARY FLAGGING OPERATION.
2. NO WORK ACTIVITY OR STORAGE OF EQUIPMENT, VEHICLES, OR MATERIAL SHOULD OCCUR WITHIN A BUFFER SPACE.
3. WHEN THE DISTANCE BETWEEN THE ADVANCE WARNING SIGNS AND WORK IS 2 MILES TO 5 MILES, A SUPPLEMENTAL DISTANCE PLAQUE (W7-3a) SHOULD BE USED WITH THE SHOULDER WORK SIGN (W21-5).
4. THE ROAD WORK NEXT XX MILES SIGN (G20-1) MAY BE USED INSTEAD OF THE ROAD WORK AHEAD SIGN (W20-1) IF WORK LOCATIONS OCCUR OVER A DISTANCE OF MORE THAN 2 MILES.
5. FOR BARRIER VEHICLE USE REQUIREMENTS SEE TABLES NY1-A AND NY2-A ON THE STANDARD SHEET TITLED "WORK ZONE TRAFFIC CONTROL LEGENDS AND NOTES".
6. IN THOSE SITUATIONS WHERE MULTIPLE WORK LOCATIONS EXIST WITHIN A LIMITED DISTANCE MAKE IT PRACTICAL TO PLACE STATIONARY SIGNS, THE DISTANCE BETWEEN THE ADVANCE WARNING SIGN AND WORK SHALL NOT EXCEED 5 MILES.
7. CHANNELIZING DEVICE SPACING (CENTER TO CENTER) SHALL NOT EXCEED 40' IN THE ACTIVE WORK SPACE.
8. TRANSVERSE DEVICES SHALL BE REQUIRED (AS PER 619 STANDARD SPECIFICATIONS) WHEN A PAVED SHOULDER HAVING A WIDTH OF 8' OR GREATER IS CLOSED FOR A DISTANCE GREATER THAN 1500'.

NOTE: SEE STANDARD SHEET TITLED "WORK ZONE TRAFFIC CONTROL LEGENDS AND NOTES" FOR LEGEND OF SYMBOLS AND/OR LETTER CODES USED IN THIS DRAWING.

STATE OF NEW YORK
DEPARTMENT OF TRANSPORTATION

U.S. CUSTOMARY STANDARD SHEET

SHOULDER CLOSURE
2-LANE 2-WAY ROADWAY

APPROVED SEPTEMBER 15, 2009

/S/ DAVID J. CLEMENTS, P.E.
DIRECTOR, OFFICE OF TRAFFIC SAFETY AND MOBILITY

ISSUED UNDER EB 09-025

619-20

EFFECTIVE DATE: 01/07/10

FILE NAME = 619-20_010710.dgn
DATE/TIME = 09-OCT-2009 10:46
USER = jhurley

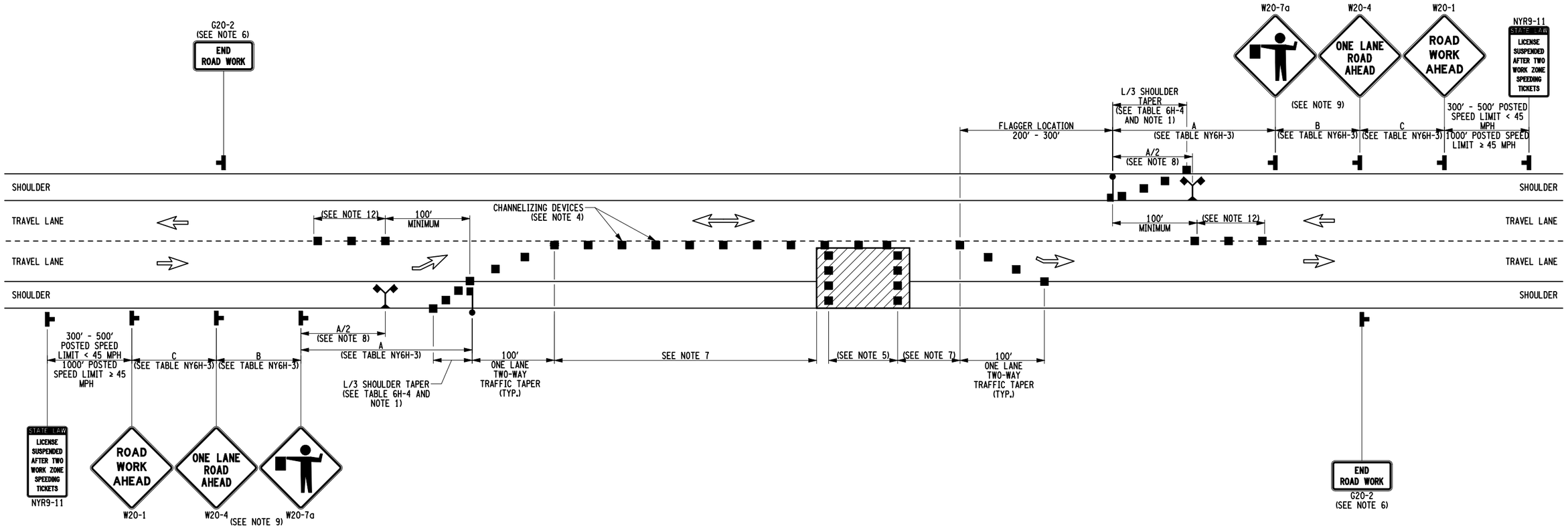

FLAGGING OPERATION
SHORT OR INTERMEDIATE TERM STATIONARY
LANE CLOSURE ON 2-LANE 2-WAY ROADWAY
(NOT TO SCALE)

NOTES:

1. WHEN PAVED SHOULDERS HAVING A WIDTH OF 8' OR MORE ARE CLOSED, CHANNELIZING DEVICES SHALL BE USED TO CLOSE THE SHOULDER IN ADVANCE TO DELINEATE THE BEGINNING OF THE WORK AREA AND DIRECT VEHICULAR TRAFFIC TO REMAIN IN THE TRAVEL WAY.
2. WHEN A SIDE ROAD OR DRIVEWAY INTERSECTS THE ROADWAY WITHIN A WORK ZONE TRAFFIC CONTROL AREA, ADDITIONAL TEMPORARY TRAFFIC CONTROL DEVICES AND/OR FLAGGERS SHALL BE PLACED AS NEEDED. ADDITIONAL FLAGGERS SHALL BE LOCATED AT ALL INTERSECTIONS AND COMMERCIAL DRIVEWAYS LOCATED WITHIN OR NEAR THE ACTIVE WORK SPACE.
3. NO WORK ACTIVITY, EQUIPMENT, OR STORAGE OF VEHICLES, OR MATERIAL SHALL OCCUR WITHIN THE BUFFER SPACE AT ANY TIME.
4. CHANNELIZING DEVICE SPACING (CENTER TO CENTER) SHALL NOT EXCEED 40' IN THE ACTIVE WORK SPACE.
5. TRANSVERSE DEVICES SHALL BE REQUIRED (AS PER 619 STANDARD SPECIFICATIONS) WHEN A PAVED SHOULDER HAVING A WIDTH OF 8' OR GREATER IS CLOSED FOR A DISTANCE GREATER THAN 1500'.
6. THE END ROAD WORK SIGN (G20-2) SHALL BE PLACED A MAXIMUM OF 500' PAST THE END OF THE WORK SPACE.
7. WHERE DIRECTED BY THE ENGINEER, A BUFFER SPACE SHALL BE PROVIDED IN ORDER TO LOCATE THE ONE-LANE, TWO-WAY TRAFFIC TAPER PRIOR TO ANY HORIZONTAL OR VERTICAL CURVE, IN ORDER TO PROVIDE ADEQUATE SIGHT DISTANCE FOR THE FLAGGERS AND/OR A QUEUE OF STOPPED VEHICLES.
8. THE FLAG TREE SHALL BE LOCATED ON THE SHOULDER, AT APPROXIMATELY ½ THE DISTANCE BETWEEN THE FLAGGER SIGN (W20-7a) AND THE FLAGGER.
9. FLAGGER SIGN (W20-7a) AND ONE LANE ROAD AHEAD SIGN (W20-4) SHALL BE REMOVED, COVERED OR TURNED AWAY FROM ROAD USERS WHEN FLAGGING OPERATIONS ARE NOT OCCURRING.
10. FLAGGER AND FLAG TREE SHALL BE ILLUMINATED TO LEVEL II ILLUMINATION DURING NIGHT TIME OPERATIONS.
11. ALL FLAGGERS SHALL USE 24" (MIN.) OCTAGON SHAPED STOP/SLOW PADDLES HAVING 6' STAFF.
12. CENTERLINE CHANNELIZING DEVICES ARE OPTIONAL AND MAY BE ELIMINATED WHERE SPACE CONSTRAINTS EXIST.

NOTE: SEE STANDARD SHEET TITLED "WORK ZONE TRAFFIC CONTROL LEGENDS AND NOTES" FOR LEGEND OF SYMBOLS AND/OR LETTER CODES USED IN THIS DRAWING.

STATE OF NEW YORK
DEPARTMENT OF TRANSPORTATION

U.S. CUSTOMARY STANDARD SHEET

FLAGGING OPERATION
2-LANE 2-WAY ROADWAY

APPROVED SEPTEMBER 15, 2009
/S/ DAVID J. CLEMENTS, P.E.
DIRECTOR, OFFICE OF TRAFFIC SAFETY AND MOBILITY

ISSUED UNDER EB 09-025

619-60

EFFECTIVE DATE: 01/07/10

FILE NAME = 619-60_0107710.dgn
DATE/TIME = 09-OCT-2009 10:46
USER = jturley

A	B	C	H	AREA (SQ. FT.)	SEE NOTE
12"	12"	8"	1½"	1.0	
18"	18"	12"	1½"	2.3	
12"	6"	4"	1½"	0.5	
12"	8"	4"	1½"	0.7	
12"	9"	4"	1½"	0.8	
18"	6"	4"	1½"	0.8	
18"	12"	6"	1½"	1.5	
6"	12"	6"	1½"	0.5	
8"	16"	10"	1½"	0.9	
9"	12"	6"	1½"	0.8	
12"	18"	12"	1½"	1.5	
12"	24"	18"	1½"	2.0	
12"	30"	24"	1½"	2.5	
12"	36"	14"	1½"	3.0	2
12"	48"	18"	1½"	4.0	2
12"	54"	24"	1½"	4.5	2
12"	60"	24"	1½"	5.0	2
18"	24"	18"	1½"	3.0	
18"	30"	24"	1½"	3.8	
18"	36"	14"	1½"	4.5	2
18"	48"	18"	1½"	6.0	2
18"	54"	24"	1½"	6.8	2
18"	60"	24"	1½"	7.5	2

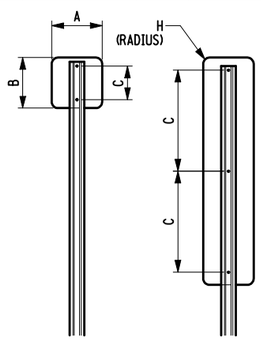

A	B	C	D	H	AREA (SQ. FT.)	SEE NOTE
21"	21"	15"	15"	1½"	3.1	
24"	24"	18"	18"	1½"	4.0	
30"	30"	24"	24"	1½"	6.3	
20"	18"	12"	15"	1½"	2.5	
21"	15"	9"	15"	1½"	2.2	
24"	6"	3"	18"	1½"	1.0	
24"	8"	4"	18"	1½"	1.3	
24"	12"	6"	18"	1½"	2.0	
24"	15"	9"	18"	1½"	2.5	
24"	18"	12"	18"	1½"	3.0	
30"	10"	6"	24"	1½"	2.1	
30"	15"	9"	24"	1½"	3.1	
30"	18"	12"	24"	1½"	3.8	
30"	21"	15"	24"	1½"	4.4	
30"	24"	18"	24"	1½"	5.0	
24"	30"	22"	18"	1½"	5.0	
24"	36"	24"	18"	1½"	6.0	
30"	36"	24"	24"	1½"	7.5	
24"	54"	24"	18"	1½"	9.0	2
30"	42"	18"	24"	1½"	8.8	2

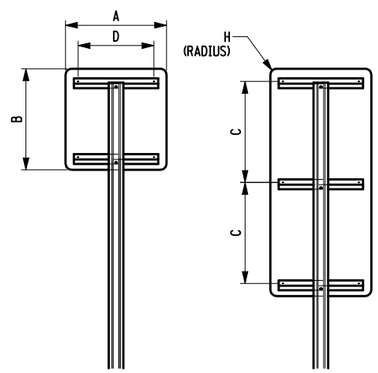

A	B	C	D	H	POST SPACING	AREA (SQ. FT.)	SEE NOTE
36"	12"	6"	15"	1½"	18"	3.0	
36"	18"	12"	15"	1½"	18"	4.5	
36"	20"	12"	15"	1½"	18"	5.0	
36"	24"	18"	15"	1½"	18"	6.0	
36"	30"	24"	15"	1½"	18"	7.5	
36"	36"	24"	15"	3"	18"	9.0	
42"	21"	12"	18"	1½"	18"	6.1	
42"	26"	18"	18"	1⅞"	18"	7.6	
42"	30"	24"	18"	1⅞"	18"	8.8	
45"	36"	24"	19½"	2¼"	24"	11.3	
48"	18"	12"	21"	1½"	24"	6.0	
48"	24"	18"	21"	1⅞"	24"	8.0	
48"	30"	24"	21"	2¼"	24"	10.0	
48"	36"	24"	21"	2¼"	24"	12.0	
54"	18"	12"	24"	1⅞"	24"	6.8	
60"	24"	18"	27"	1½"	30"	10.0	
60"	30"	24"	27"	2¼"	30"	12.5	
36"	48"	18"	15"	2¼"	18"	12.0	2
36"	54"	24"	15"	2¼"	18"	13.5	2
36"	60"	24"	15"	2¼"	18"	15.0	2
42"	60"	24"	18"	3"	24"	17.5	2
48"	60"	24"	21"	3"	24"	20.0	2
42"	42"	18"	21"	3"	24"	12.3	2
48"	48"	18"	21"	3"	24"	16.0	2
60"	48"	18"	27"	3"	30"	20.0	2
64"	42"	18"	27"	3"	30"	18.7	2

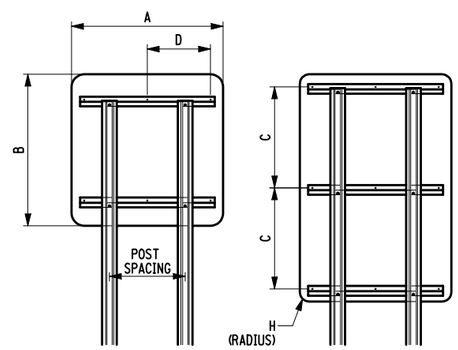

A	B	C	D	E	G	H	POST SPACING	AREA (SQ. FT.)	PAYMENT AREA (SQ. FT.)
40"	30"	10"				1⅞"	9"	3.8	7.1
48"	36"	12"				2"	12"	5.5	10.3
64"	48"	11"	6"	18"	17"	3"	12"	9.7	18.1

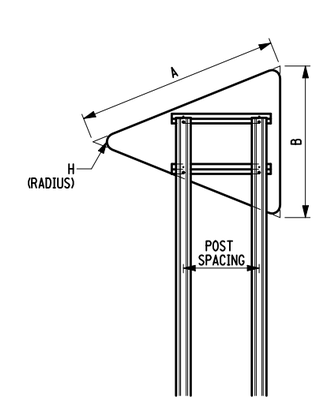

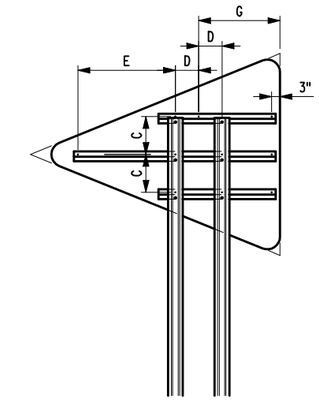

A	C	D	E	G	H	POST SPACING	AREA (SQ. FT.)	PAYMENT AREA (SQ. FT.)
30"	16"	12"	12"	4"	1⅞"		4.6	6.3
36"	18"	18"	15"	4"	2¼"	18"	6.6	9.0
48"	24"	24"	21"	6"	3"	24"	11.6	16.0

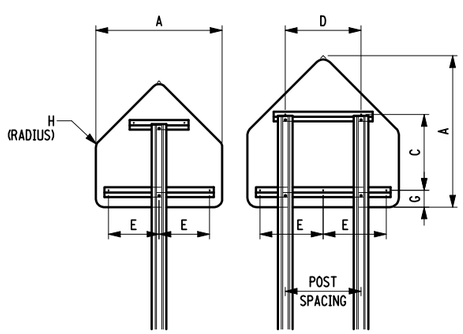

NOTES:

1. SIGN BLANKS SHALL BE 10 GAUGE THICK ALUMINUM. FIBERGLASS REINFORCED PLASTIC MAY BE USED FOR SIGN PANELS UP TO 48" X 48".
2. THESE PANELS USE THE "C" DIMENSION TWICE FOR EITHER MOUNTING HOLES OR HORIZONTAL Z BARS.
3. THE "PAYMENT AREA", WHICH INCLUDES FABRICATION WASTAGE, SHALL BE USED ONLY FOR DETERMINING PAYMENT FOR NON-RECTANGULAR SIGN BLANKS.
4. INTERMEDIATE SIZE SIGN BLANKS THAT ARE NOT SHOWN, SHALL BE FABRICATED SIMILAR TO THE CLOSEST SHOWN SIZE.
5. SIGN PANELS WIDER THAN SHOWN SHALL BE FABRICATED AS SHOWN ON THE CURRENT "LARGE GUIDE SIGNS" STANDARD SHEET.
6. ADDITIONAL SIGN BLANK DIMENSIONS ARE GIVEN IN "STANDARD HIGHWAY SIGNS", FEDERAL HIGHWAY ADMINISTRATION.
7. THE HORIZONTAL Z BAR LENGTH SHALL BE A MINIMUM OF 1" LONGER THAN THE CENTER TO CENTER DISTANCE BETWEEN EXTREME MOUNTING HOLES. WHERE POSTS ARE LOCATED AT THE END OF HORIZONTAL Z BAR, THE HORIZONTAL Z BAR SHALL EXTEND BEYOND THE SIDE OF THE POST A MINIMUM OF ONE ½" AND A MAXIMUM OF 2".
8. ALUMINUM Z BARS WEIGHING ONE POUND PER FOOT AND MEASURING Z 2⅜" X 1¼" X 3⁄16" MAY BE PREPUNCHED WITH 5⁄16"ø HOLES AT 1" CENTERS ALONG THE ENTIRE LENGTH.
9. POST AND HORIZONTAL Z BAR ARRANGEMENTS ARE SHOWN FOR COMMON BLANKS. THESE ARRANGEMENTS MAY BE ADJUSTED AS NECESSARY WHERE A NUMBER OF SIGN BLANKS ARE GROUPED IN SIGN ASSEMBLIES OR WHERE ADDITIONAL POSTS ARE REQUIRED DUE TO POST CAPACITY LIMITATIONS.
10. MATERIALS ARE PER SUBSECTIONS:
    730-01 ALUMINUM SIGN PANELS
    730-22 STIFFENERS, OVERHEAD BRACKETS AND MISCELLANEOUS HARDWARE
    730-23 FIBERGLASS REINFORCED PLASTIC SIGN PANELS
11. WHERE 730-05.02 REFLECTIVE SHEETING (CLASS B) OR TYPE IX IS REQUIRED, NYLON OR PLASTIC WASHERS SHALL BE INSTALLED BETWEEN FASTENER BOLT HEADS (OR NUTS) AND THE REFLECTIVE SHEETING ON THE SIGN FACE.
12. POSTS AND POST FOOTINGS SHALL BE INSTALLED AS SPECIFIED ON THE APPROPRIATE STANDARD SHEETS OR AS PER MANUFACTURERS INSTRUCTIONS.
13. THE TOP HOLES SHOWN ON THE HORIZONTAL Z BARS ARE FOR THE PANEL TO HORIZONTAL Z BAR CONNECTIONS. THE BOTTOM HOLES ON THE HORIZONTAL Z BARS ARE FOR THE HORIZONTAL Z BAR TO SIGN POST CONNECTIONS. THE HOLES SHOWN ON PANELS WITHOUT HORIZONTAL Z BARS ARE FOR PANEL TO POST CONNECTIONS.

EFFECTIVE DATE: 01/07/10

STATE OF NEW YORK
DEPARTMENT OF TRANSPORTATION

U.S. CUSTOMARY STANDARD SHEET

SIGN BLANK DETAILS
(SHEET 1 OF 2)

APPROVED OCTOBER 05, 2009
/S/ RICHARD W. LEE, P.E.
FOR THE DEPUTY CHIEF ENGINEER (DESIGN)

ISSUED UNDER EB 09-025

645-01

FILE NAME = 645-0101_010710.dgn
DATE/TIME = 09-OCT-2009 10:47
USER = jturley

A	C	D	E	H	POST SPACING	AREA (SQ. FT.)
24"	12"			1"		1.0
30"	18"			1"		2.3
24"	16"	12"		1½"		4.0
30"	20"	15"		1⅞"		6.3
36"	12"	18"	15"	2½"	18"	9.0
48"	16"	24"	21"	3"	24"	16.0

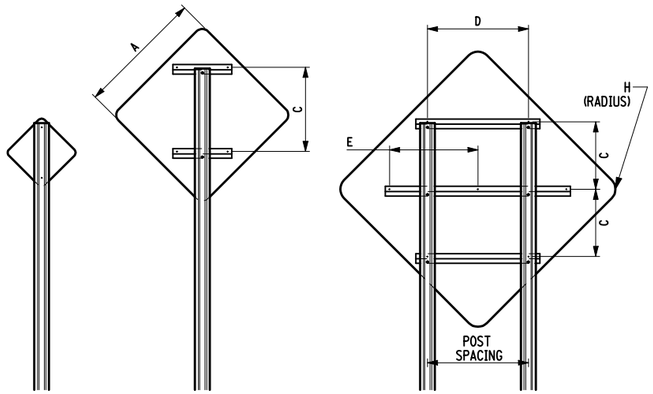

A	B	C	D	E	F	POST SPACING	AREA (SQ. FT.)	PAYMENT AREA (SQ. FT.)
24"	24"	18"	12"				3.0	4.0
30"	24"	18"	12"				4.0	5.0
36"	36"	24"	18"			18"	6.8	9.0
45"	36"	24"	18"			18"	9.1	11.3
48"	48"	18"	18"	18"	12"	24"	12.1	16.0
60"	48"	18"	18"	24"	12"	24"	16.2	20.0

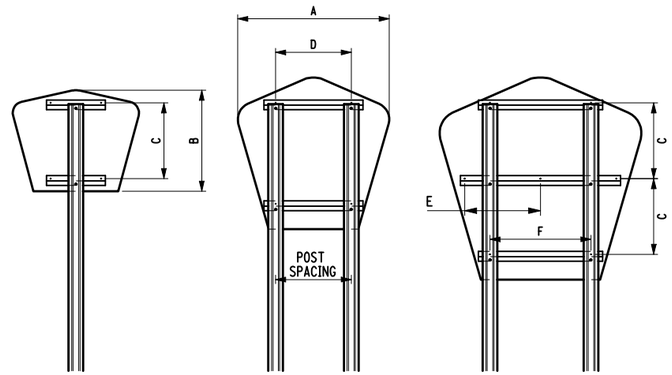

A	B	C	D	E	F	POST SPACING	AREA (SQ. FT.)	PAYMENT AREA (SQ. FT.)
24"	24"	18"	18"	6"			3.2	4.0
30"	24"	18"	24"	12"			3.8	5.0
36"	36"	24"	24"	12"		18"	7.0	9.0
45"	36"	24"	18"	18"		18"	8.8	11.3
48"	48"	16"	10"	16"	19"	24"	12.4	16.0
60"	48"	16"	10"	16"	25"	24"	15.5	20.0

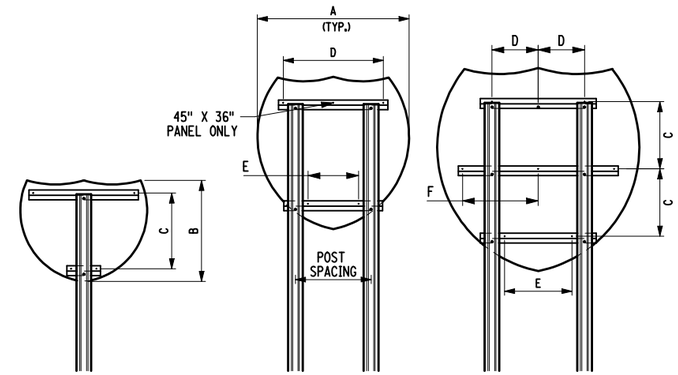

A	L	C	D	E	G	H	POST SPACING	AREA (SQ. FT.)	PAYMENT AREA (SQ. FT.)
18"	15"	12"				1½"		1.0	1.9
24"	21"	12"	15"	2"	3"	1½"		1.8	3.5
30"	27"	14"	18"	4"	4"	1½"		2.7	5.7
36"	31"	18"	24"	4"	4"	2"		3.9	7.8
48"	41.5	16"	18"	9"	4"	3"	18"	7.0	13.9
60"	52	21"	24"	12"	4"	4"	24"	10.9	21.7

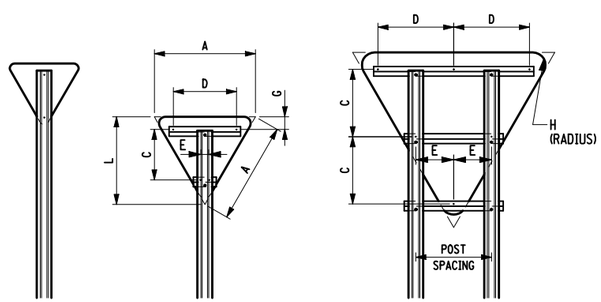

A	C	D	E	POST SPACING	AREA (SQ. FT.)	PAYMENT AREA (SQ. FT.)
15"	9"				1.3	1.6
18"	12"				1.8	2.3
24"	16"	12"			3.1	4.0
30"	20"	15"			4.9	6.3
36"	12"	18"	15"	18"	7.1	9.0
48"	16"	24"	21"	24"	12.6	16.0

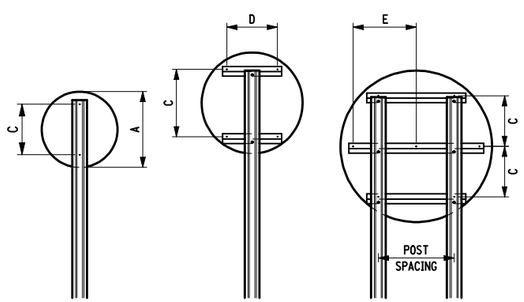

A	C	D	E	POST SPACING	AREA (SQ. FT.)	PAYMENT AREA (SQ. FT.)
18"	12"				1.8	2.3
24"	14"	12"			3.1	4.0
30"	18"	15"			5.0	6.3
36"	12"	18"	15"	18"	7.0	9.0
48"	16"	24"	21"	24"	12.5	16.0

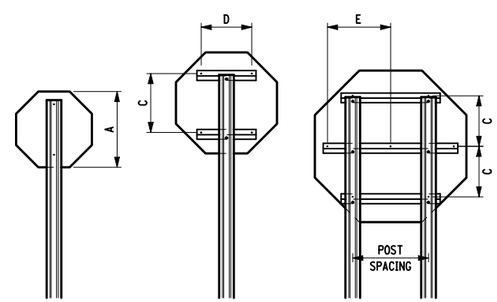

AREA (SQ. FT.)	
5.4	1.3
PAYMENT AREA (SQ. FT.)	
16.0	4.0
POST SPACING	
24"	12"

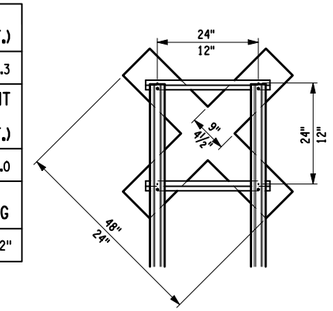

STATE OF NEW YORK
DEPARTMENT OF TRANSPORTATION

U.S. CUSTOMARY STANDARD SHEET

SIGN BLANK DETAILS (SHEET 2 OF 2)

APPROVED OCTOBER 05, 2009

/S/ RICHARD W. LEE, P.E.

FOR THE DEPUTY CHIEF ENGINEER (DESIGN)

ISSUED UNDER EB 09-025

645-01

EFFECTIVE DATE: 01/07/10

FILE NAME = 645-0102_010710.dgn
DATE/TIME = 09-OCT-2009 10:47
USER = jturley

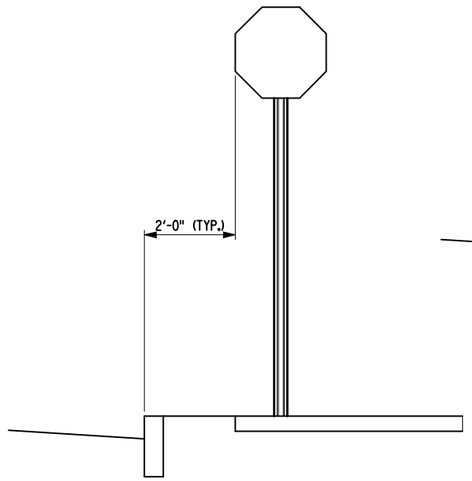

CURBED SECTION

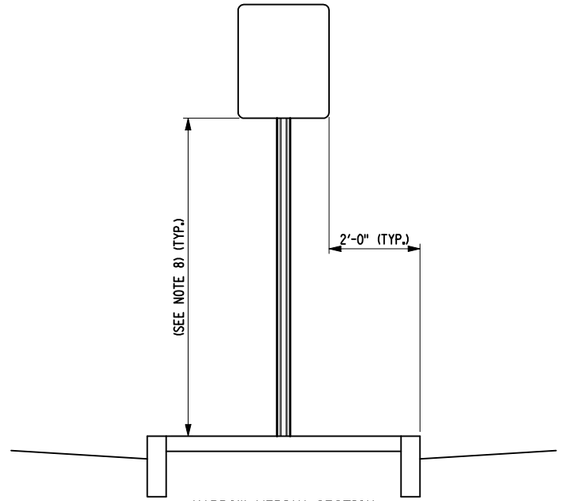

NARROW MEDIAN SECTION

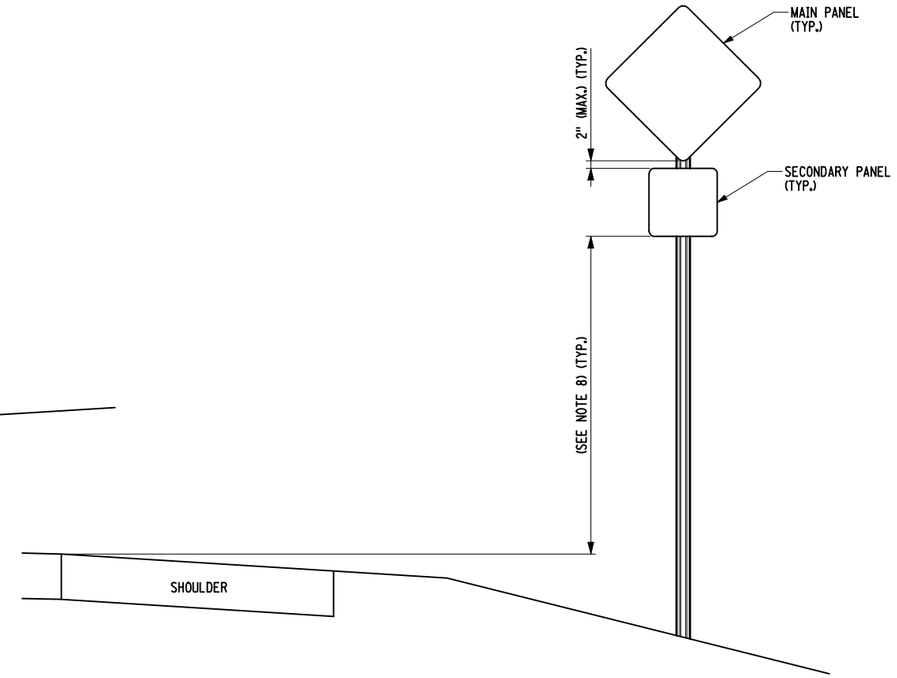

FILL SECTION (WITH SUPPLEMENTARY PANEL)

NOTES:

1. THESE DETAILS ARE TYPICAL ONLY AND ARE TO BE USED BY THE CONTRACTOR AS GUIDES IN INSTALLING THE SIGN ARRANGEMENTS SHOWN ON THE PLANS.
2. THE POST TYPE (TYPE A WITH OR WITHOUT SOIL PLATES OR EXTRA EMBEDMENT, HIGH CAPACITY TYPE A OR TYPE B) AND SIZE SHALL BE BASED ON THE SIGN AREA AND MOUNTING HEIGHT AS FOUND ON THE CURRENT MATERIALS DETAILS OR STANDARD SHEETS.
3. POSTS SHALL BE ERECTED AS SHOWN ON THE CURRENT MATERIALS DETAILS OR STANDARD SHEETS. POSTS SHOULD NOT BE ERECTED IN OR STRADDLING THE DITCH LINE.
4. HORIZONTAL Z BAR DIMENSIONS AND SPACING SHALL BE AS SHOWN ON THE CURRENT "SIGN BLANK DETAILS" STANDARD SHEETS. PANEL TO HORIZONTAL Z BAR CONNECTION DETAILS SHALL BE AS SHOWN ON THE CURRENT "SIGN PANEL DETAILS FOR INFO, GUIDE, AND OTHER SIGNS" STANDARD SHEET.
5. SIGN ASSEMBLIES HAVING SIGN PANELS MOUNTED SIDE-BY-SIDE SHALL HAVE CONTINUOUS HORIZONTAL Z BARS.
6. SIGNS WIDER THAN 30" SHALL USE TWO OR MORE POSTS.
7. THE VERTICAL SPACING BETWEEN PANELS SHALL BE AS SHOWN (2" MAX.).
8. THE VERTICAL DISTANCE TO THE BOTTOM OF THE SIGN SHALL BE DETERMINED AS FOLLOWS:
   A. CLEARANCE - 7' FROM THE GROUND TO THE BOTTOM OF THE SIGN.
   B. HEIGHT (ABOVE NEAR EDGE OF TRAVEL LANE OR ABOVE TOP OF CURB)
      - 7' (6' WITH SUPPLEMENTARY PANEL) ON CONVENTIONAL HIGHWAYS AND EXPRESSWAYS WHERE PARKED VEHICLES OR PEDESTRIAN ARE PRESENT.
      - 5' (4' WITH SUPPLEMENTARY PANEL) ON CONVENTIONAL HIGHWAYS AND EXPRESSWAYS WHERE NO PARKED VEHICLES OR PEDESTRIANS ARE PRESENT.
      - 7' (5' WITH LATERAL CLEARANCE GREATER THAN 30' ON FREEWAYS FOR GUIDE SIGNS. (WHERE FEASIBLE, A 30' MINIMUM LATERAL CLEARANCE IS REQUIRED FOR LARGE GUIDE SIGNS).
      - 7' ON FREEWAYS FOR REGULATORY, WARNING AND SMALL GUIDE SIGNS.
      - 5' (4' WITH SUPPLEMENTARY PANEL) ON RAMPS. (DIRECT CONNECT ROADWAYS SHALL BE CONSIDERED TO BE FREEWAYS, NOT RAMPS).
      - 4' MINIMUM ON BICYCLE PATHS. (5' MAX)
   C. WHERE THERE ARE PHYSICAL LIMITATIONS OR VISIBILITY CONSIDERATIONS, THE SIGNS SHALL BE LOCATED AS ORDERED BY THE ENGINEER-IN-CHARGE.
9. THE LATERAL CLEARANCE TO THE EDGE OF THE SIGN SHALL BE DETERMINED AS FOLLOWS:
   A. SHOULDER WIDTH OF LESS THAN 6', 12' MINIMUM FROM THE EDGE OF TRAVEL LANE.
   B. SHOULDER WIDTH OF 6' OR GREATER, 6' MINIMUM FROM THE EDGE OF SHOULDER.
   C. CURBED SECTIONS, 2' TYP. FROM THE FACE OF CURB.
   D. BICYCLE PATHS, 3' MINIMUM FROM THE EDGE OF PATH (6' MAX).
   E. TYPE B OBJECT MARKERS SHOULD BE PLACED WITH THE NEAR EDGE OF THE MARKER IN LINE WITH THE EDGE OF THE OBSTRUCTION CLOSEST TO TRAFFIC.
   F. WHERE THERE ARE PHYSICAL LIMITATIONS OR VISIBILITY CONSIDERATIONS, THE SIGNS SHALL BE LOCATED AS ORDERED BY THE ENGINEER-IN-CHARGE.
   G. SEE STANDARD SHEET TITLED "POSITIONING OF TRAFFIC SIGNS (SHEET 2 OF 2)" WHEN GUIDE RAIL IS PRESENT.

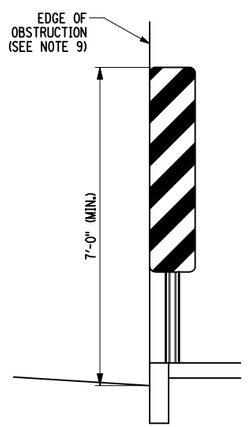

TYPE B OBJECT MARKER POSITIONING

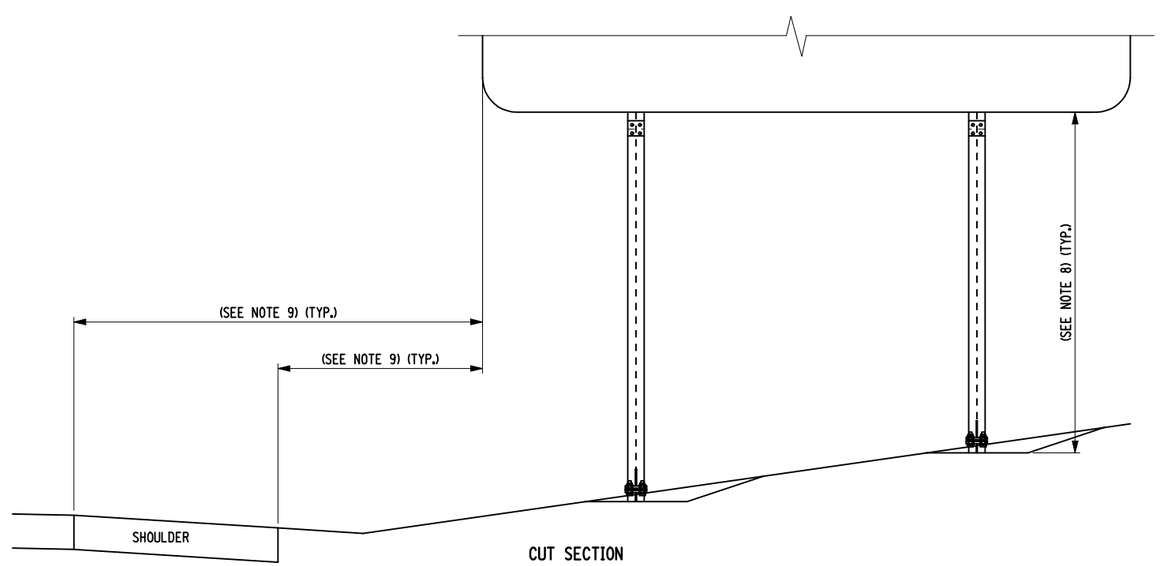

CUT SECTION

EFFECTIVE DATE: 01/07/10

STATE OF NEW YORK
DEPARTMENT OF TRANSPORTATION

U.S. CUSTOMARY STANDARD SHEET

POSITIONING OF TRAFFIC SIGNS
(SHEET 1 OF 2)

APPROVED OCTOBER 05, 2009	ISSUED UNDER EB 09-025
/S/ RICHARD W. LEE, P.E. FOR THE DEPUTY CHIEF ENGINEER (DESIGN)	645-03

FILE NAME = 645-0301_010710.dgn
DATE/TIME = 09-OCT-2009 10:47
USER = jturley

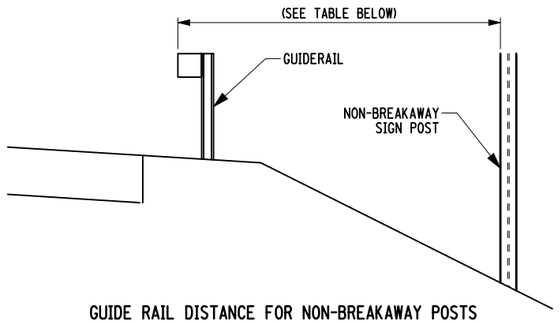

GUIDE RAIL DISTANCE FOR NON-BREAKAWAY POSTS

GUIDE RAIL TYPE / POST SPACING	MINIMUM DISTANCE
CABLE (POST 16'-0" O.C.)	12'-0"
CABLE (POST 12'-0" O.C.)	11'-0"
CABLE (POST 8'-0" O.C.)	9'-0"
CORRUGATED BEAM (POST 12'-6" O.C.)	9'-0"
CABLE (POST 4'-0" O.C.)	8'-0"
CORRUGATED BEAM (POST 6'-3" O.C.)	7'-0"
CORRUGATED BEAM (POST 4'-2" O.C.)	6'-0"
6" X 6" BOX BEAM (POST 6'-0" O.C.)	6'-0"
HEAVY POST BLOCKED OUT CORRUGATED (POST 6'-3" O.C.)	5'-6"
6" X 6" BOX BEAM (POST 3'-0" O.C.)	5'-0"
HEAVY POST BLOCKED OUT CORRUGATED (POST 3'-1½" O.C.)	3'-6"

NOTE: IN ADDITION TO MEETING THE OFFSET REQUIREMENTS ON STANDARD SHEET TITLED "POSITIONING OF TRAFFIC SIGNS (SHEET 1 OF 2)" THE POST SHALL BE OFFSET FROM THE FACE OF THE GUIDE RAIL BY THE AMOUNT SHOWN IN THE TABLE ABOVE.

NOTE: ALL BACK TO BACK SIGNS SHALL BE MOUNTED AS SHOWN, INCLUDING STREET NAME SIGNS.

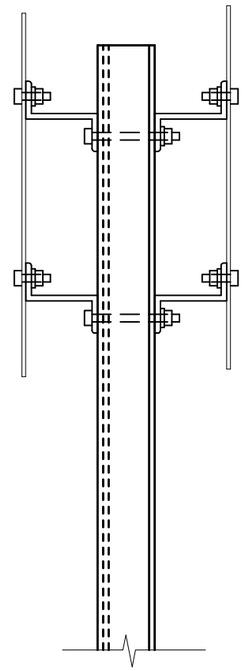

BACK TO BACK SIGN POSITIONING

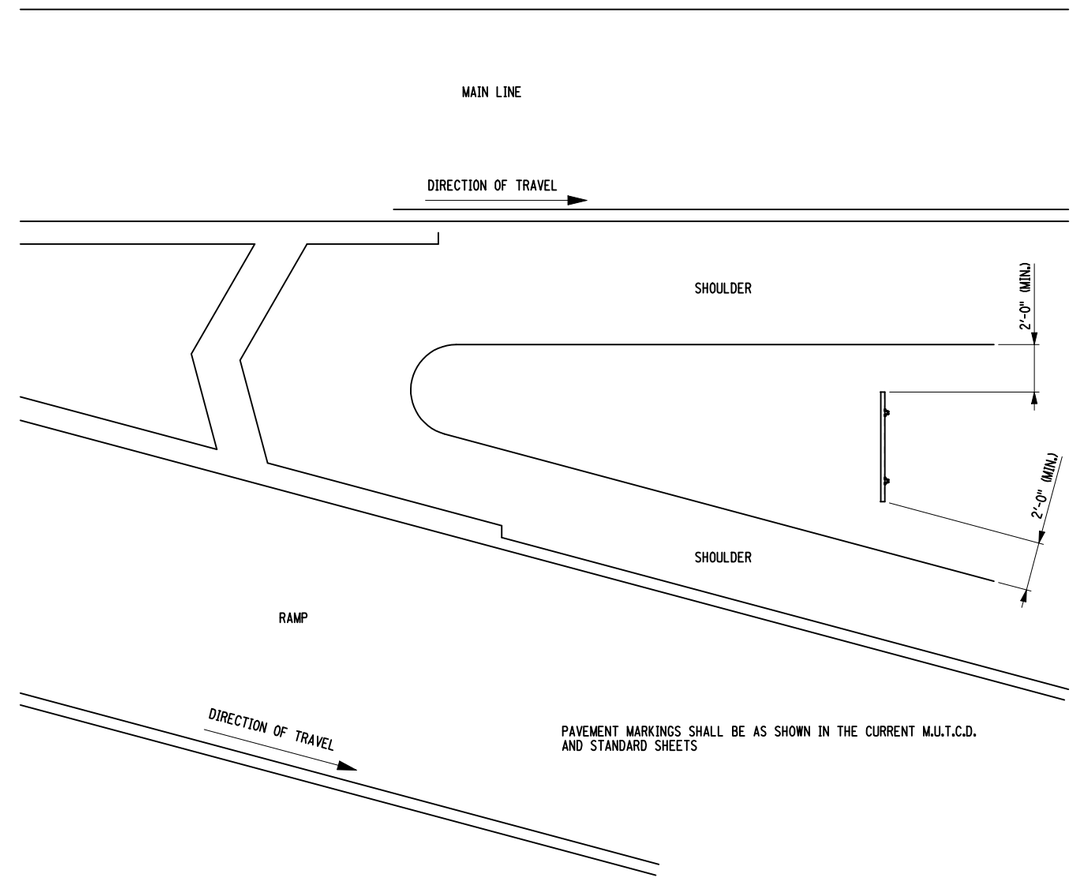

PAVEMENT MARKINGS SHALL BE AS SHOWN IN THE CURRENT M.U.T.C.D. AND STANDARD SHEETS

GORE EXIT SIGN POSITIONING

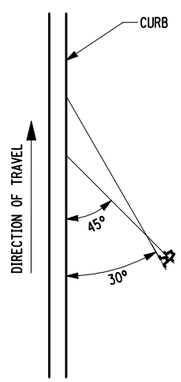

PARKING SIGN POSITIONING

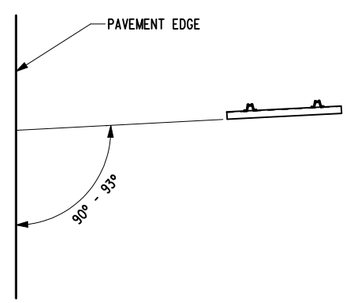

STANDARD SIGN POSITIONING

FOR LATERAL CLEARANCE < 30'
FOR > 30', SHOULD BE < 90°

STATE OF NEW YORK
DEPARTMENT OF TRANSPORTATION

U.S. CUSTOMARY STANDARD SHEET

POSITIONING OF TRAFFIC SIGNS
(SHEET 2 OF 2)

APPROVED OCTOBER 05, 2009
/S/ RICHARD W. LEE, P.E.
FOR THE DEPUTY CHIEF ENGINEER (DESIGN)

ISSUED UNDER EB 09-025

645-03

EFFECTIVE DATE: 01/07/10

FILE NAME = 645-0302_010710.dgn
DATE/TIME = 09-OCT-2009 10:47
USER = jturley

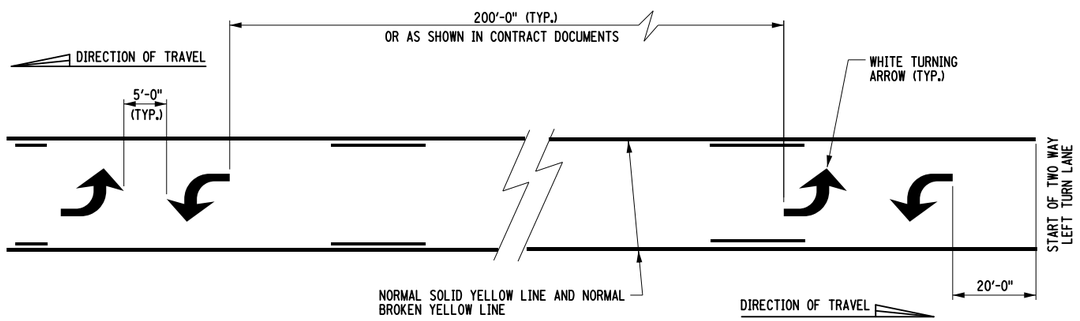

TWO-WAY LEFT TURN LANE DETAIL

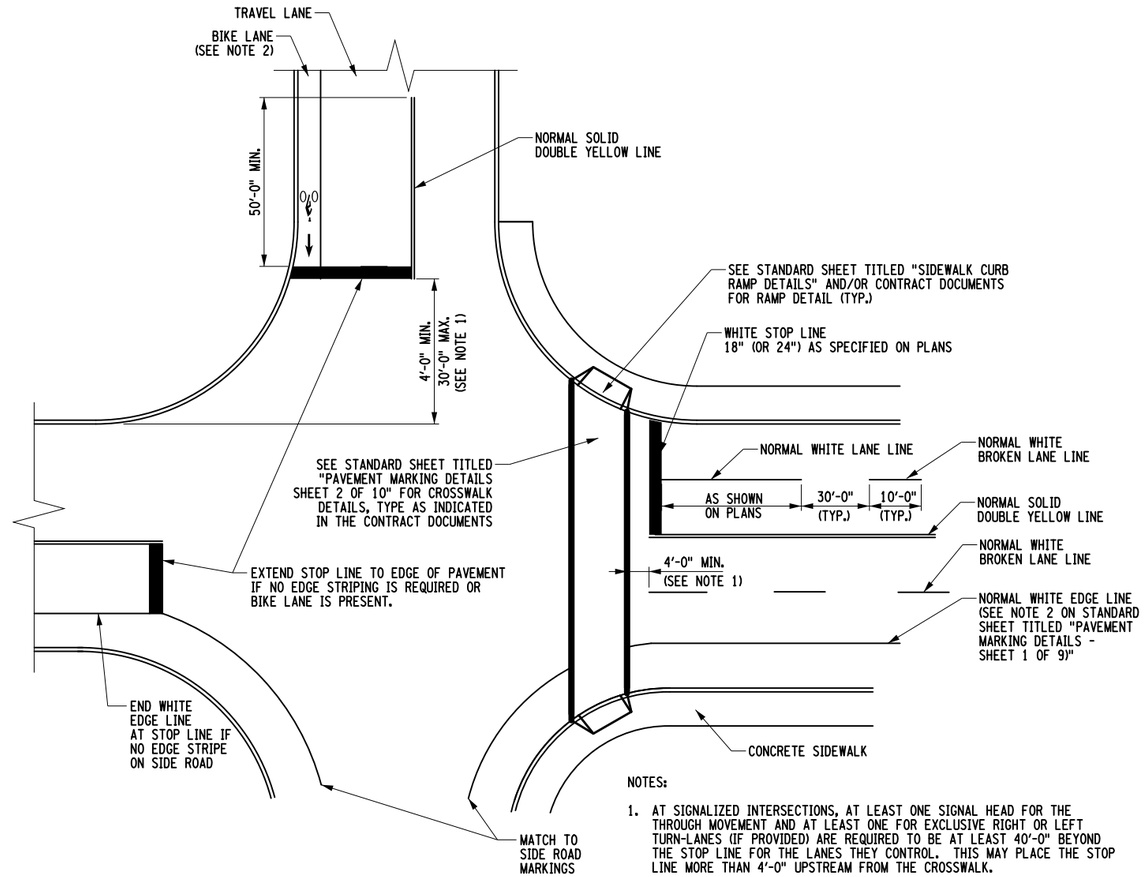

NOTES:

1. AT SIGNALIZED INTERSECTIONS, AT LEAST ONE SIGNAL HEAD FOR THE THROUGH MOVEMENT AND AT LEAST ONE FOR EXCLUSIVE RIGHT OR LEFT TURN-LANES (IF PROVIDED) ARE REQUIRED TO BE AT LEAST 40'-0" BEYOND THE STOP LINE FOR THE LANES THEY CONTROL. THIS MAY PLACE THE STOP LINE MORE THAN 4'-0" UPSTREAM FROM THE CROSSWALK.
2. DISCONTINUE BIKE LANE MARKINGS AT LEAST 100'-0" BEFORE INTERSECTION IF NO MARKED BIKE LANE IS PRESENT DOWNSTREAM.

TYPICAL INTERSECTION MARKINGS

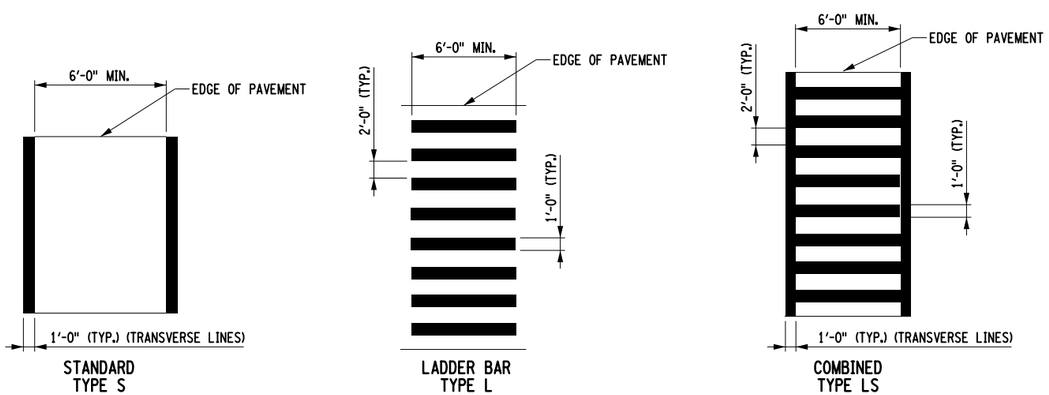

TYPICAL CROSSWALK DETAILS

NOTES:

1. ALL CROSSWALK MARKINGS SHALL BE WHITE.
2. TYPE "L" AND TYPE "LS" CROSSWALKS SHALL HAVE THE LONGITUDINAL LINES PARALLEL TO THE LANE LINES.

1. SEE STANDARD SHEET 685-01 (SHEET 1 OF 9) FOR LINE LAYOUT AND DIMENSIONS (EXCEPT AS NOTED).
2. REFER TO STANDARD SHEET 685-01 (SHEET 1 OF 9) FOR GENERAL NOTES.

STATE OF NEW YORK
DEPARTMENT OF TRANSPORTATION

U.S. CUSTOMARY STANDARD SHEET

PAVEMENT MARKING DETAILS
(SHEET 2 OF 9)

APPROVED SEPTEMBER 24, 2012	ISSUED UNDER EB 12-036
/S/ TODD B. WESTHUIS, P.E. ACTING DIRECTOR, OFFICE OF TRAFFIC SAFETY AND MOBILITY	685-01

EFFECTIVE DATE: 05/02/2013

FILE NAME = 685-0102_050213.dgn
DATE/TIME = 27-SEP-2012 10:05
USER = jturley